ARCDIS-1XXA Series

7”, 8”, 10.1”, 12.1”, 15”, 15.6”, 17”, 18.5”, 19”, 21.5”, 23.8” and 32”Front Panel IP66 / IP69K(option) Aluminum Die-casting Chassis Display(32”-Aluminum)

User Manual

Release Date	Revision
May. 2020	V1.5

®2020 Aplex Technology, Inc. All Rights Reserved. Published in Taiwan

Aplex Technology, Inc.

15F-1, No.186, Jian Yi Road, Zhonghe District, New Taipei City 235, Taiwan

Tel: 886-2-82262881 Fax: 886-2-82262883 URL: http://aplextec.com/en/home.php

Revision History

Reversion	Date	Description
1.0	2019/01/11	Official Version
1.1	2019/06/14	● Add 7”, 8”, 10.1” Models’ Data ● Revise Dimension Figures ● Revise Product Photos
1.2	2019/08/21	● Revise 1.2 spec sheet
1.3	2019/09/11	● Change TB-6802 Photo ● Revise mechanical information
1.4	2019/11/15	● Add 32” model
1.5	2020/05/05	● Modify AD Board Specification

Warning!_____

This equipment generates, uses and can radiate radio frequency energy and if not installed and used in accordance with the instructions manual, it may cause interference to radio communications. It has been tested and found to comply with the limits for a Class A computing device pursuant to FCC Rules, which are designed to provide reasonable protection against such interference when operated in a commercial environment. Operation of this equipment in a residential area is likely to cause interference in which case the user at his own expense will be required to take whatever measures may be required to correct the interference.

Electric Shock Hazard – Do not operate the machine with its back cover removed. There are dangerous high voltages inside.

Disclaimer

This information in this document is subject to change without notice. In no event shall Aplex Technology Inc. be liable for damages of any kind, whether incidental or consequential, arising from either the use or misuse of information in this document or in any related materials.

Table of Contents

Revision History……1
Warning!……2

Chapter 1 Getting Started

1.1 Features……6
1.2 Specifications……6
1.3 Dimensions……12
1.4 Brief Description of ARCDIS-1XXA Series……18

Chapter 2 AD BOARD INFORMATION

2.1 AD Board Specifications……30
2.2 Board Dimensions……31
2.3 Jumpers and Connectors Location……32
2.4 Jumper Settings and Connectors……33

Chapter 3 OSD

3.1 AD Board OSD Functions……41
3.2 OSD Controls……42
3.3 Main Menu……43

Chapter 4 Installation

4.1 Windows 7 Universal Driver Installation for PenMount 6000 Series……46
4.2 Software Functions……54

Appendix A: Panel Mounting and VESA Mounting

Panel mounting and VESA mounting……72

Figures

Figure 1.1: Dimensions of ARCDIS-107APRG(H)……12
Figure 1.2: Dimensions of ARCDIS-108APRG(H)……12
Figure 1.3: Dimensions of ARCDIS-110APRG(H)……13
Figure 1.4: Dimensions of ARCDIS-112APRG(H)……13
Figure 1.5: Dimensions of ARCDIS-115APRG(H)……14
Figure 1.6: Dimensions of ARCDIS-116APRG(H)……14
Figure 1.7: Dimensions of ARCDIS-117APRG(H)……15
Figure 1.8: Dimensions of ARCDIS-118APRG(H)……15
Figure 1.9: Dimensions of ARCDIS-119APRG(H)……16
Figure 1.10: Dimensions of ARCDIS-121APRG(H)……16
Figure 1.11: Dimensions of ARCDIS-124APG(H)……17
Figure 1.12: Dimensions of ARCDIS-132APG……17
Figure 1.13: Front View of ARCDIS-107APRG(H)……18
Figure 1.14: Rear View of ARCDIS-107APRG(H)……19
Figure 1.15: Front View of ARCDIS-108APRG(H)……19
Figure 1.16: Rear View of ARCDIS-108APRG(H)……20
Figure 1.17: Front View of ARCDIS-110APRG(H)……20
Figure 1.18: Rear View of ARCDIS-110APRG(H)……21
Figure 1.19: Front View of ARCDIS-112APRG(H)……21
Figure 1.20: Rear View of ARCDIS-112APRG(H)……22
Figure 1.21: Front View of ARCDIS-115APRG(H)……22
Figure 1.22: Rear View of ARCDIS-115APRG(H)……23
Figure 1.23: Front View of ARCDIS-116APRG(H)……23
Figure 1.24: Rear View of ARCDIS-116APRG(H)……24
Figure 1.25: Front View of ARCDIS-117APRG(H)……24
Figure 1.26: Rear View of ARCDIS-117APRG(H)……25
Figure 1.27: Front View of ARCDIS-118APRG(H)……25
Figure 1.28: Rear View of ARCDIS-118APRG(H)……26
Figure 1.29: Front View of ARCDIS-119APRG(H)……26
Figure 1.30: Rear View of ARCDIS-119APRG(H)……27
Figure 1.31: Front View of ARCDIS-121APRG(H)……27
Figure 1.32: Rear View of ARCDIS-121APRG(H)……28
Figure 1.33: Front View of ARCDIS-124APG(H)……28
Figure 1.34: Rear View of ARCDIS-124APG(H)……29
Figure 1.35: Front View of ARCDIS-132APG……29
Figure 1.36: Rear View of ARCDIS-132APG……29

Figure 2.1: Dimensions of TB-6802(Top)……..……..……..31
Figure 2.2: Dimensions of TB-6802(Bottom)……..……..31
Figure A: Panel mounting and VESA mounting……72

Chapter 1 Getting Started

1.1 Features

- Solid aluminum die-casting chassis
- Variety of LCD panel size selections
- IP66 / **IP69K(option)** compliant front panel
- VGA, DVI-D, HDMI, and DP input
- Wide range DC 9~36V power input
- High Brightness LCD and Auto Dimming for optional(Except 7”)
- Support protective AR glass for option (non-touch version)

1.2 Specifications

	ARCDIS-1XXA Series
Outside I/O Port	
VGA	1
DVI-D	1 x DVI-D input (share with HDMI)
DP	1
HDMI	1 x HDMI input (share with DVI-D)
Audio	1 x audio line-in phone jack
OSD control	OSD on the rear side
LED Light	1 x system power LED light **(not available for 19” and 23.8”)**
Speaker	1 x 2Wspeaker for option
Power	1 x 3-pins terminal block for DC 9~36V power input
Others	1 x USB type B for touch control 1 x RS-232 DB-9 for touch control for option
Power	
Power Input	DC 9~36V
Touch Screen	
Type	Resistive touch window (for R model, no 23.8” and 32”) Projected capacitive touch screen (for P model) Protective AR glass with non-touch version(for G model)
Interface	USB RS-232 for option **(Only for resistive touch model)**
Light Transmission	Resistive touch window: over 80%

	Projected capcitive touch screen: over 90%
Mechanical	
Construction	**Aluminum front bezel/Aluminum die-casting for back cover(17”/18.5”/19”)** **(Aluminum chassis front bezel/ steel back cover for 23.8”/32”)**
Mounting	Panel mount / VESA mount 100 x 100 (VESA mount 200 x 100 for 23.8”) Panel Mount/VESA mount 75 x 75(7” and 8”) Panel Mount/VESA Mount 200(32”)
IP Rating	IP66/**IP69K(option)** compliant front panel
Environmental	
Operating temperature	0~50°C -20~60°C is optional for 7”, 8”, 10.1”, 12.1” and 15” **(0~40°C only for 21.5” High brightness model)**
Storage temperature	-30~70°C
Storage humidity	10 to 90% @ 40°C, non- condensing
Vibration	1G / 5~500Hz (Random) / Operation
Shock	15G peak acceleration (11 msec. duration) / Operation
Certification	CE / FCC Class A

- **Power Consumption and Mechanical Specification**

	ARCDIS-107APRG(H)	ARCDIS-108APRG(H)	ARCDIS-110APRG(H)
Power Consumption			
Power Consumption	MAX: 3.86(107AP)	MAX: 5.6W(108AP)	MAX: 5.2W(110AP)
Mechanical			
Dimensions(mm)	202 x 149 x 40	231.1 x 176.1 x 50	285 x 189 x 48.9
Net Weight	1.06 Kg	1.85 Kg	1.9 Kg

	ARCDIS-112APRG(H)	ARCDIS-115APRG(H)	ARCDIS-116APRG(H)	ARCDIS-117APRG(H)
Power Consumption				
Power Consumption	MAX: 9.34W(112AP)	MAX: 8.67W(115AP)	MAX: 12.7W(116AP)	MAX: 11.2W(117AP)
Mechanical				
Dimensions(mm)	319 x 245 x 51.6	410 x 300 x 54.6	412 x 277.6 x 58.7	439 x 348 x 64.7
Net Weight	2.7 Kg	4.3 Kg	4.4 Kg	6.0 Kg

	ARCDIS-118APRG(H)	ARCDIS-119APRG(H)	ARCDIS-121APRG(H)	ARCDIS-124APG(H)
Power Consumption				
Power Consumption	MAX: 18.5W(118AP)	MAX: 16.6W(119AP)	MAX: 17.7W(121AP)	MAX: 21W(124AP)
Mechanical				
Dimensions(mm)	499.9 x 314.8 x 60.1	468 x 380 x 64.8	557 x 362 x 65.1	640 x 395 x 46
Net Weight	6.4 Kg	7.2 kg	7.5 kg	9.5kg

	ARCDIS-132APG(H)
Power Consumption	
Power Consumption	Max: 48W
Mechanical	
Dimensions (mm)	810.08 x 65.12 x 490.12
Net Weight	16.57 Kg

- **Standard LCD**

	ARCDIS-107APRG	ARCDIS-108APRG	ARCDIS-110APRG
Display Type	**7” color TFT LCD**	**8” color TFT LCD**	**10.1” color TFT LCD**
Max. Resolution	800 x 480	800 x 600	1280 x 800
Max. Colors	262K	16.2M	16.7M
Contrast Ratio	400: 1	500: 1	800: 1
Luminance(cd/m^2)	350	350	350
Viewing Angle	140(H) / 110(V)	140(H) / 125(V)	170(H) / 170(V)
Backlight Lifetime	40,000 hrs	40,000 hrs	25,000 hrs

	ARCDIS-112APRG		ARCDIS-115APRG
Display Type	12.1” color TFT LCD		15” color TFT LCD
Max. Resolution	800 x 600	1024 x 768	1024 x 768
Max. Colors	16.2M	16.2M	262K
Contrast Ratio	1500: 1	700: 1	800: 1
Luminance(cd/m^2)	450	500	420
Viewing Angle	178(H) / 178(V)	160(H) / 140(V)	160(H) / 160(V)
Backlight Lifetime	50,000 hrs	30,000 hrs	30,000 hrs

	ARCDIS-116APRG	ARCDIS-117APRG	ARCDIS-118APRG
Display Type	15.6” color TFT LCD	17” color TFT LCD	18.5” color TFT LCD
Max. Resolution	1366 x 768	1280 x 1024	1366 x 768
Max. Colors	16.7M	16.2M	16.7M
Contrast Ratio	500: 1	1000: 1	1000: 1
Luminance(cd/m^2)	300	350	300
Viewing Angle	160(H) / 160(V)	170(H) / 160(V)	170(H) / 160(V)
Backlight Lifetime	50,000 hrs	30,000 hrs	50,000 hrs

	ARCDIS-119APRG	ARCDIS-121APRG	ARCDIS-124APG
Display Type	19” color TFT LCD	21.5” color TFT LCD	23.8” color TFT LCD
Max. Resolution	1280 x 1024	1920 x 1080	1920 x 1080
Max. Colors	16.7M	16.7M	16.7M
Contrast Ratio	1000: 1	3000: 1	3000: 1

Luminance(cd/m^2)	350	250	250
Viewing Angle	170(H) / 165(V)	178(H) / 178(V)	178(H) / 178(V)
Backlight Lifetime	50,000 hrs	30,000 hrs	30,000 hrs

	ARCDIS-132APG
Display Type	32” color TFT LCD
Max. Resolution	1920 x 1080
Max. Colors	16.7M
Contrast Ratio	3000:1
Luminance(cd/m^2)	500
Viewing Angle	178(H)/ 178(V)
Backlight Lifetime	30,000 hrs

- **High Brightness LCD (Option, 32” not support)**

	ARCDIS-107APRGH	**ARCDIS-108APRGH**	**ARCDIS-110APRGH**
Display Type	**7” color TFT LCD**	**8” color TFT LCD**	**10.1” color TFT LCD**
Max. Resolution	800 x 480	800 x 600	1280 x 800
Max. Colors	262K	16.2M	16.2M
Contrast Ratio	400: 1	500: 1	1000: 1
Luminance(cd/m^2)	1000	1000	1000
Viewing Angle	140(H) / 130(V)	140(H) / 125(V)	170(H) / 170(V)
Backlight Lifetime	50,000 hrs	30,000 hrs	50,000 hrs
	ARCDIS-112APRGH		**ARCDIS-115APRGH**
Display Type	12.1” color TFT LCD		15” color TFT LCD
Max. Resolution	800 x 600	1024 x 768	1024 x 768
Max. Colors	16.2M	16.2M	16.2M
Contrast Ratio	700: 1	700: 1	800: 1
Luminance(cd/m^2)	1000	1000	1000
Viewing Angle	178(H) / 178(V)	160(H) / 140(H)	160(H) / 160(V)
Backlight Lifetime	50,000 hrs	50,000 hrs	30,000 hrs

	ARCDIS-116APRGH	ARCDIS-117APRGH	ARCDIS-118APRGH
Dipslay			
Display Type	15.6” color TFT LCD	17” color TFT LCD	18.5” color TFT LCD
Max. Resolution	1366 x 768	1280 x 1024	1366 x 768
Max. Colors	16.7M	16.7M	16.7M
Contrast Ratio	500: 1	1000: 1	1000: 1
Luminance(cd/m^2)	1000	1000	1000
Viewing Angle	160(H) / 160(V)	170(H) / 160(V)	170(H) / 160(V)
Backlight Lifetime	50,000 hrs	50,000 hrs	50,000 hrs
	ARCDIS-119APRGH	**ARCDIS-121APRGH**	**ARCDIS-124APGH**
Dipslay			
Display Type	19” color TFT LCD	21.5” color TFT LCD	**23.8” color TFT LCD**
Max. Resolution	1280 x 1024	1920 x 1080	1920 x 1080
Max. Colors	16.7M	16.7M	16.7M
Contrast Ratio	1000: 1	3000: 1	3000:1
Luminance(cd/m^2)	1000	1000	1000
Viewing Angle	170(H) / 160(V)	178(H) / 178(V)	178(H) / 178(V)
Backlight Lifetime	50,000 hrs	50,000 hrs	30,000 hrs

1.3 Dimensions

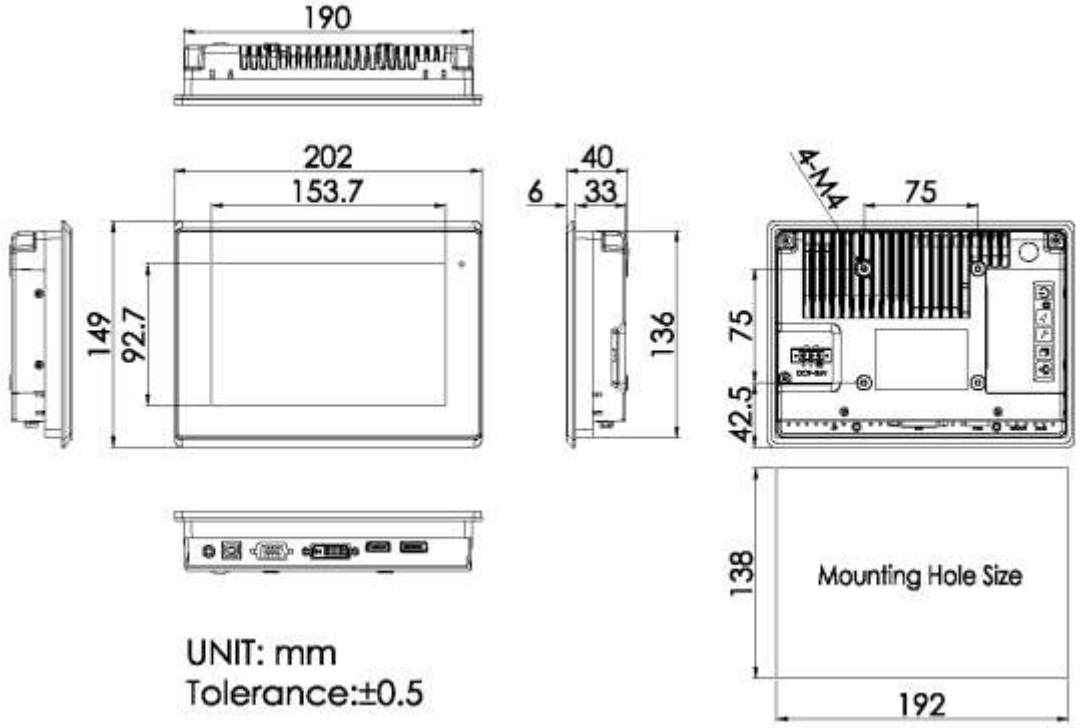

Figure 1.1: Dimensions of ARCDIS-107APRG(H)

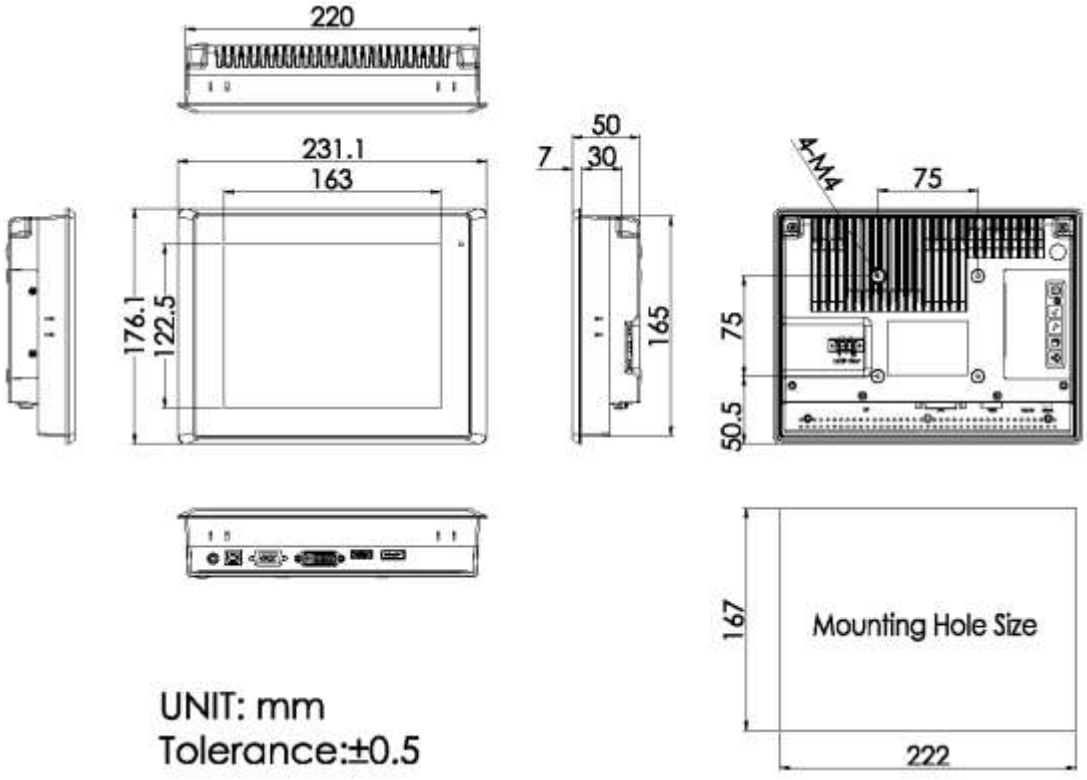

Figure 1.2: Dimensions of ARCDIS-108APRG(H)

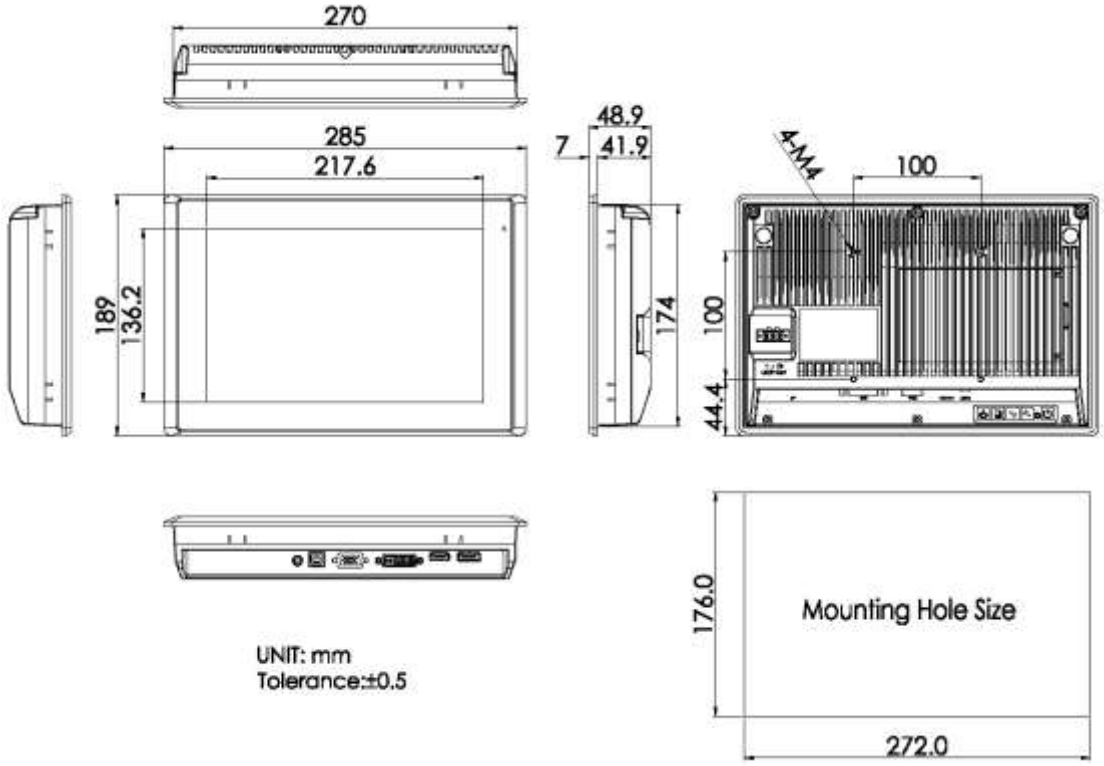

Figure 1.3: Dimensions of ARCDIS-110APRG(H)

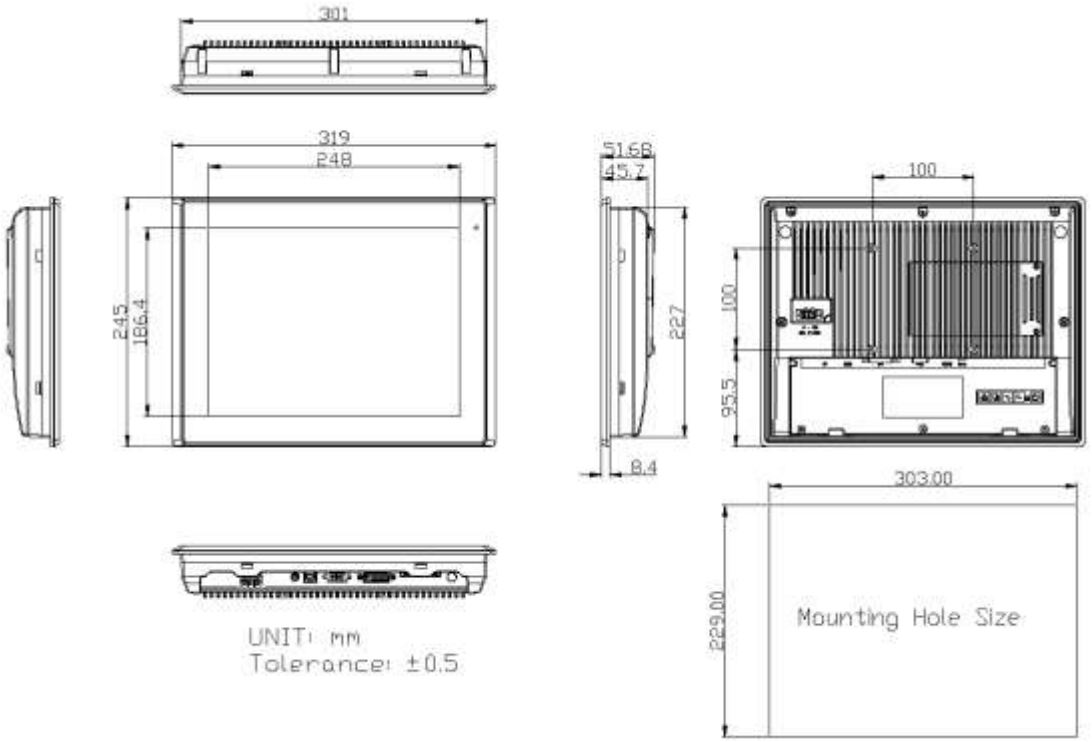

Figure 1.4: Dimensions of ARCDIS-112APRG(H)

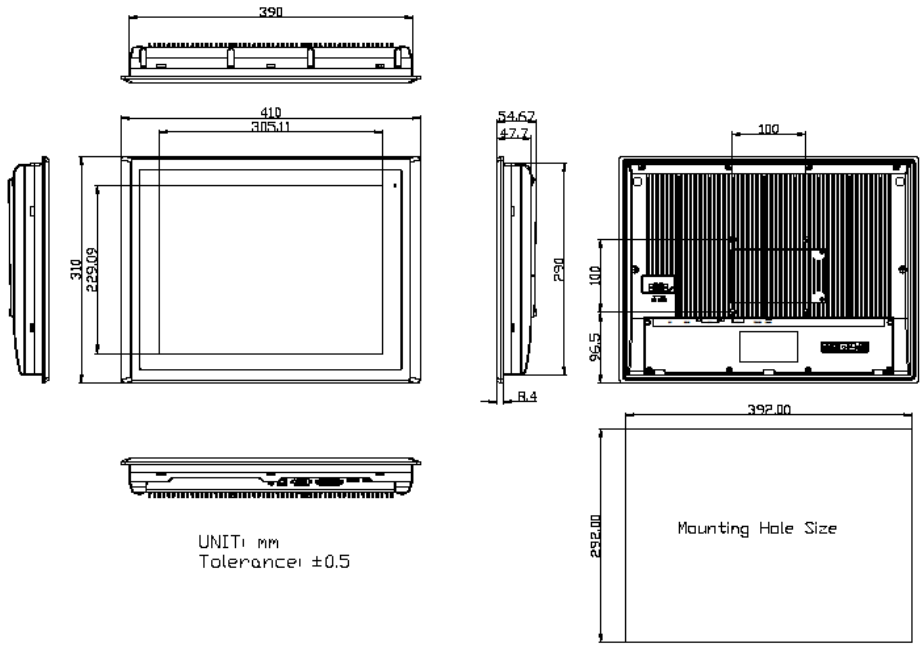

Figure 1.5: Dimensions of ARCDIS-115APRG(H)

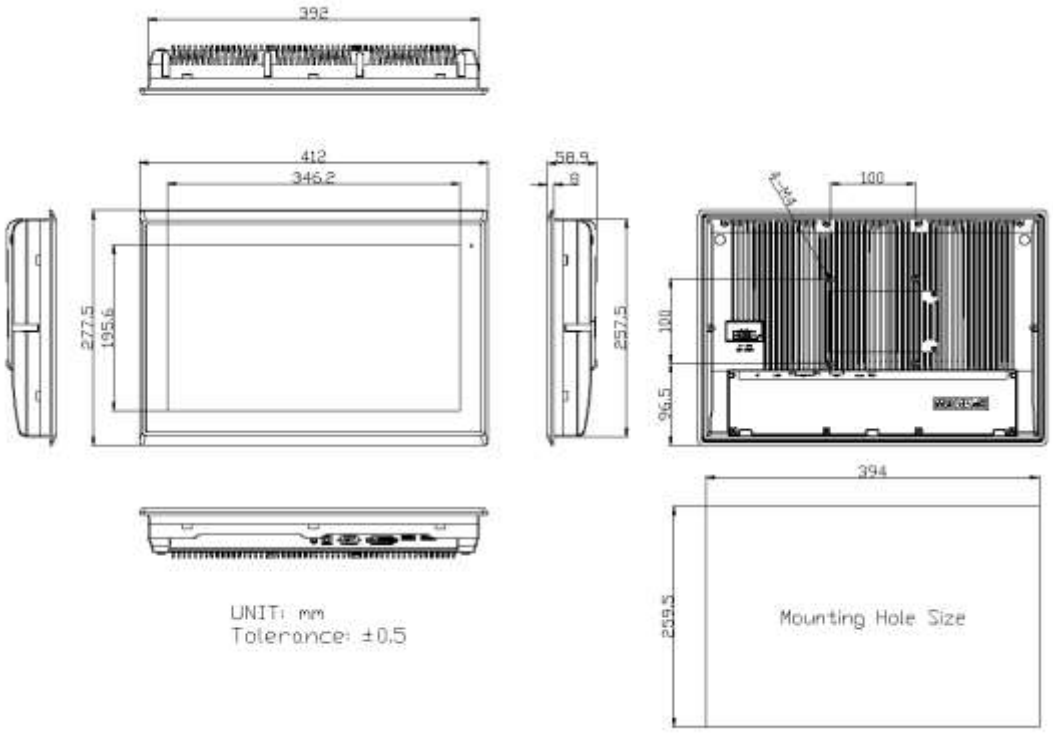

Figure 1.6: Dimensions of ARCDIS-116APRG(H)

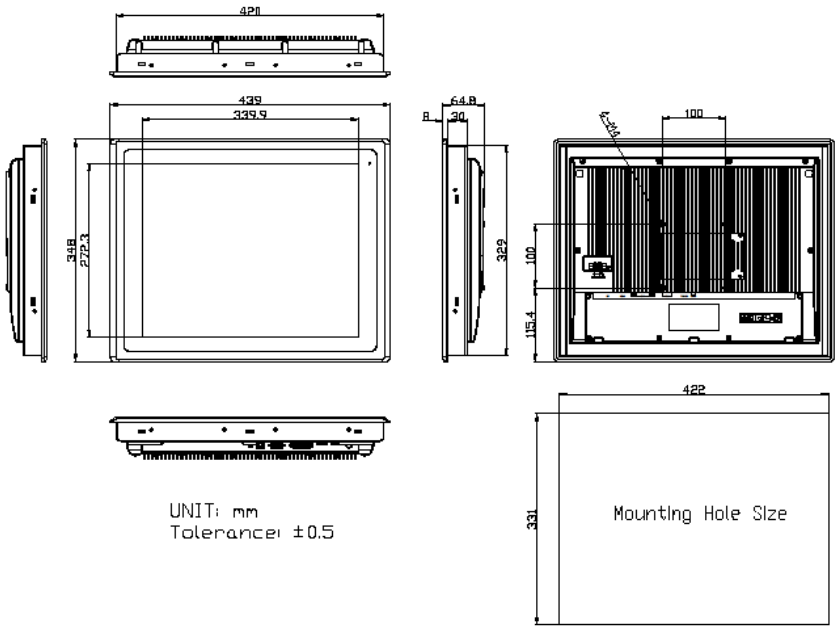

Figure 1.7: Dimensions of ARCDIS-117APRG(H)

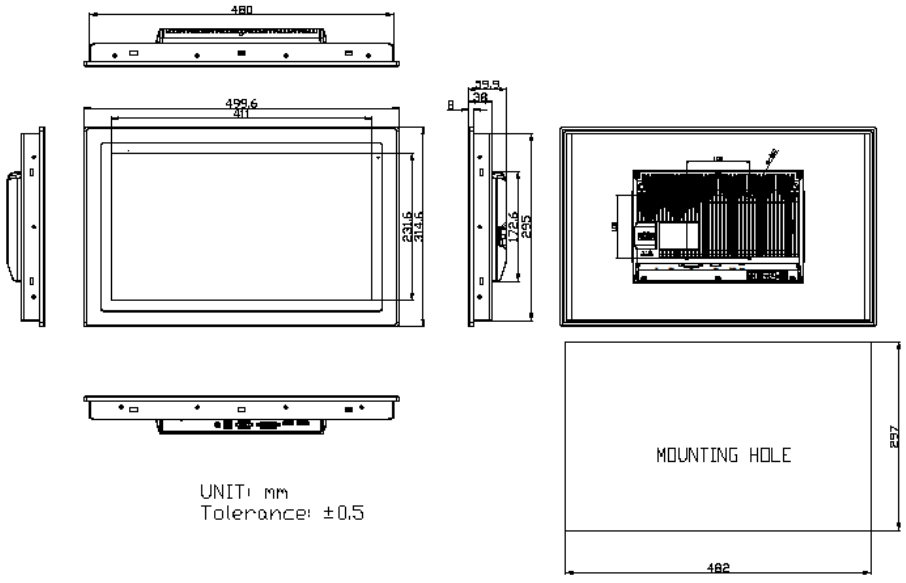

Figure 1.8: Dimensions of ARCDIS-118APRG(H)

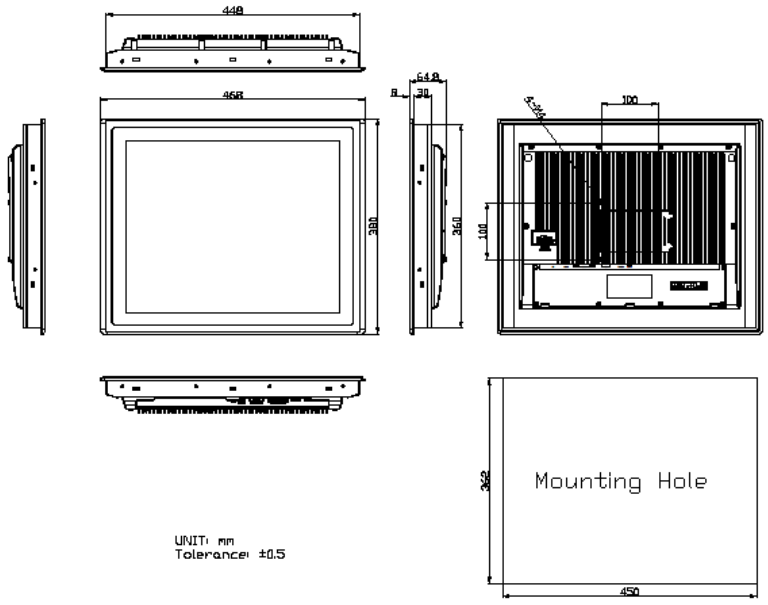

Figure 1.9: Dimensions of ARCDIS-119APRG(H)

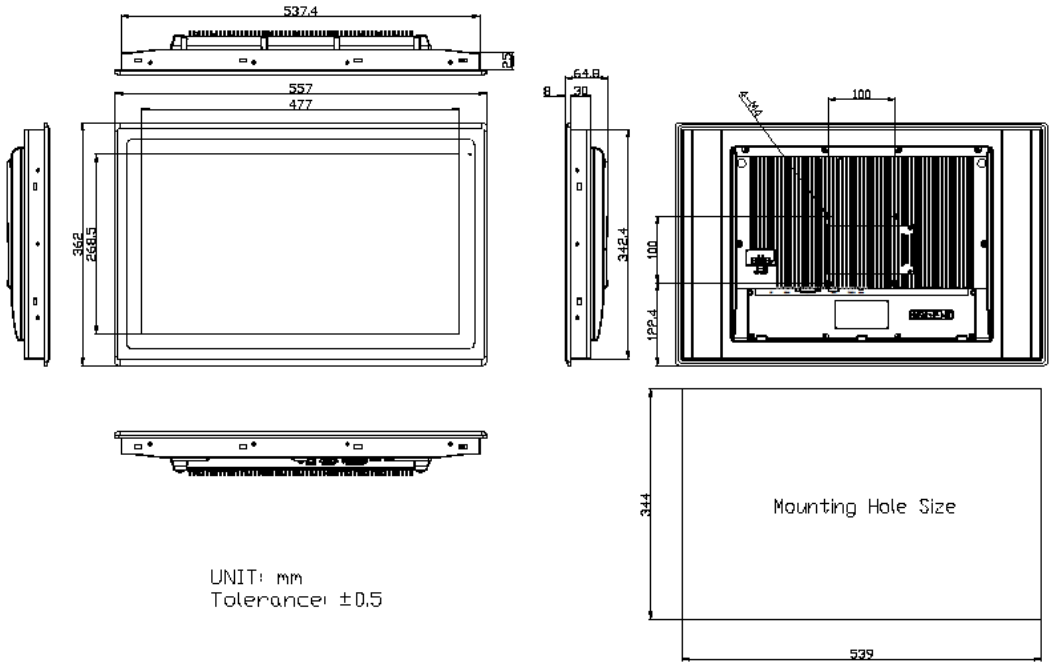

Figure 1.10: Dimensions of ARCDIS-121APRG(H)

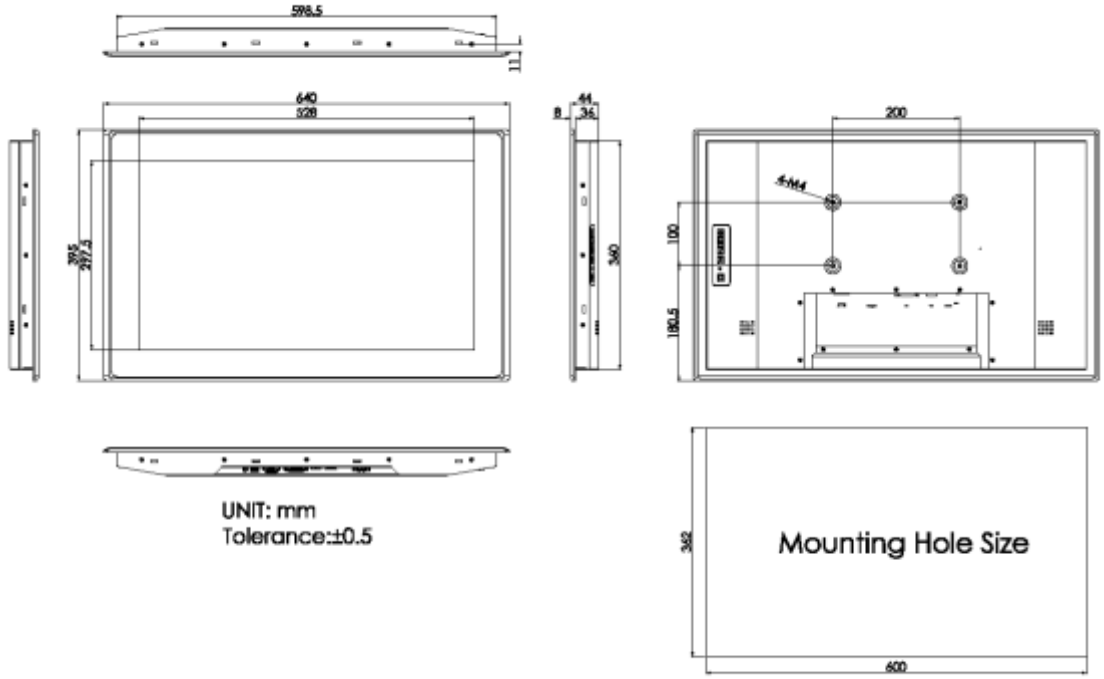

Figure 1.11: Dimensions of ARCDIS-124APG(H)

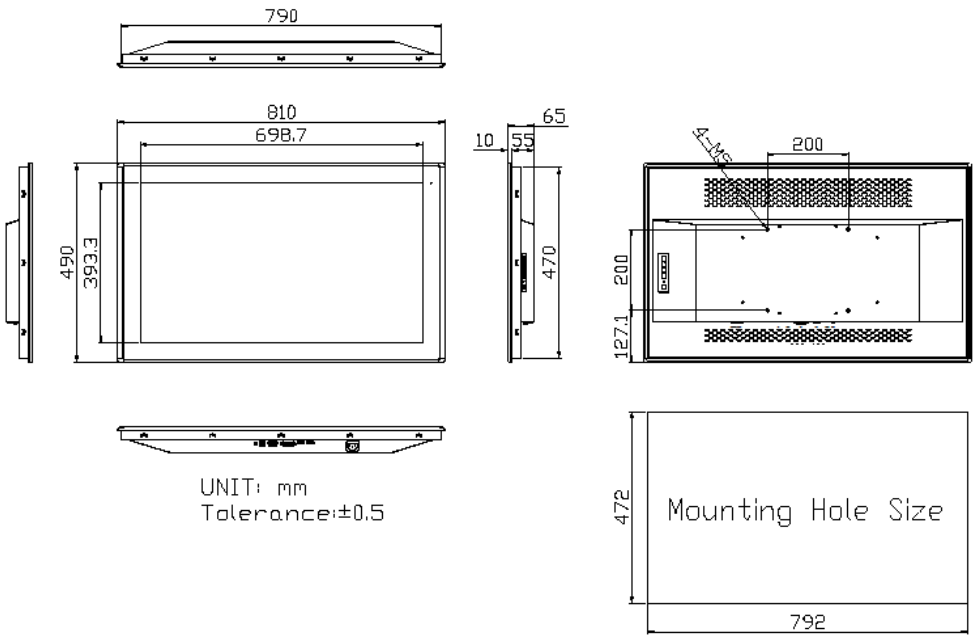

Figure 1.12: Dimensions of ARCDIS-132APG

1.4 Brief Description of ARCDIS-1XXAPRG(H)

ARCDIS-1XXAPRG(H) with TB-6802 AD Board is an IP66 / **IP69K(option)** compliant front bezel aluminum die-casting chassis display, which comes with 7”to 23.8” color TFT LCD. But for 17”/18.5”/19” and 32”, these models are Aluminum front bezel with steel chassis, with color RAL9007. The optional high brightness 1,000nits LCD is ideal for sunlight readable semi-outdoor applications. Furthermore, 12.1” display can be XGA 1024 x 768 resolution for option. The model series supports VGA, DVI-D, DP, and HDMI input, and it can be VESA 100 x 100 mounted. ARCDIS-1XXAPRG(H) series has more outstanding features, thus giving the best in monitoring and control applications.

Figure 1.13: Front View of ARCDIS-107APRG(H)

Figure 1.14: Rear View of ARCDIS-107APRG(H)

Figure 1.15: Front View of ARCDIS-108APRG(H)

Figure 1.16: Rear View of ARCDIS-108APRG(H)

Figure 1.17: Front View of ARCDIS-110APRG(H)

Figure 1.18: Rear View of ARCDIS-110APRG(H)

Figure 1.19: Front View of ARCDIS-112APRG(H)

Figure 1.20: Rear View of ARCDIS-112APRG(H)

Figure 1.21: Front View of ARCDIS-115APRG(H)

Figure 1.22: Rear View of ARCDIS-115APRG(H)

Figure 1.23: Front View of ARCDIS-116APRG(H)

Figure 1.24: Rear View of ARCDIS-116APRG(H)

Figure 1.25: Front View of ARCDIS-117APRG(H)

Figure 1.26: Rear View of ARCDIS-117APRG(H)

Figure 1.27: Front View of ARCDIS-118APRG(H)

Figure 1.28: Rear View of ARCDIS-118APRG(H)

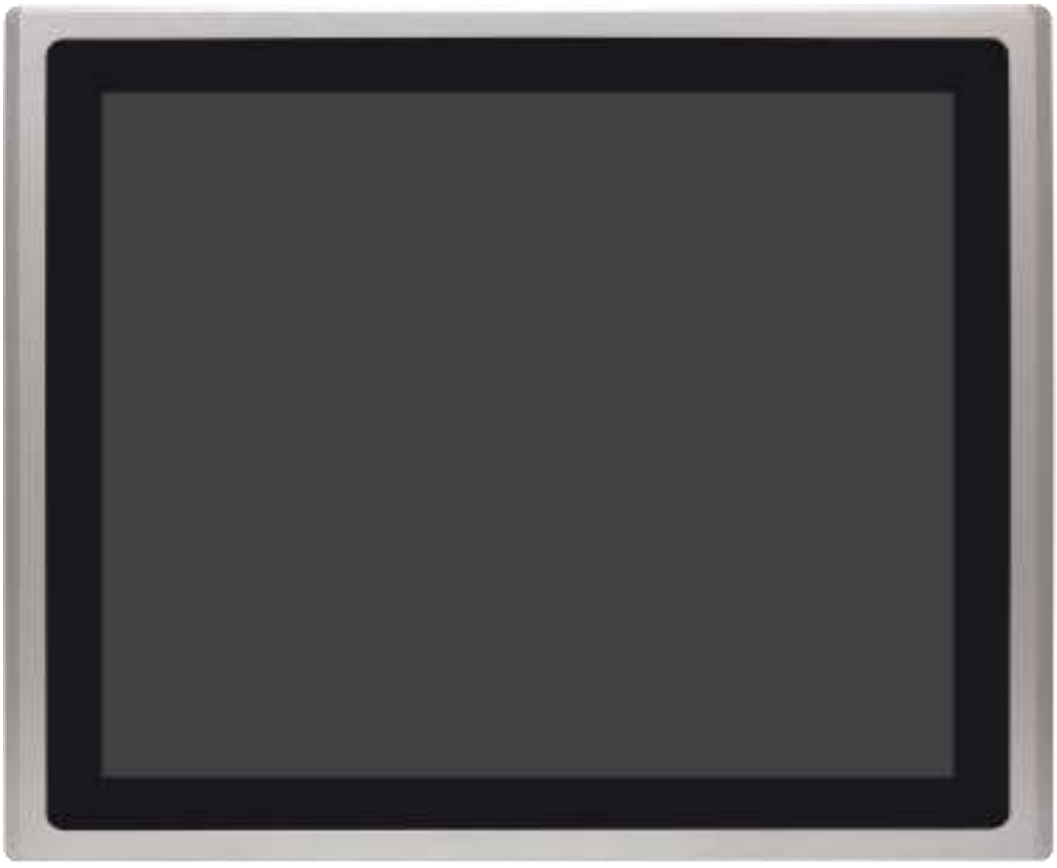

Figure 1.29: Front View of ARCDIS-119APRG(H)

Figure 1.30: Rear View of ARCDIS-119APRG(H)

Figure 1.31: Front View of ARCDIS-121APRG(H)

Figure 1.32: Rear View of ARCDIS-121APRG(H)

Figure 1.33: Front View of ARCDIS-124APG(H)

Figure 1.34: Back View of ARCDIS-124APG(H)

Figure 1.35: Front View of ARCDIS-132APG

Figure 1.36: Back View of ARCDIS-132APG

Chapter 2 AD BOARD INFORMATION

2.1 AD Board Specification

Specifications	
Board Size	170 x 113 mm
Scalar IC	Realtek RTD2556T-CG
Input	1 x HDMI Input 1 x DisplayPort(DP) 1 x USB2.0(Type-B) 1 x VGA 1 x Line in (3.5mm Audio Jack)
Output	1 x Supports up to 24-bit LVDS FULL HD panel interface 1 x eDP Support 2x2W specker via SPKR1/SPKL1
Resolution	Up to 1920 x1080 @60Hz for LVDS Up to 1920 x1080 @60Hz for eDP
Power input	DC9~36V input
Temperature	Operating: -20℃ to 70℃ Storage: -40℃ to 85℃
Humidity	10% - 90%, non-condensing, operating
EMI/EMS	Meet CE/FCC class A

2.2 Board Dimensions

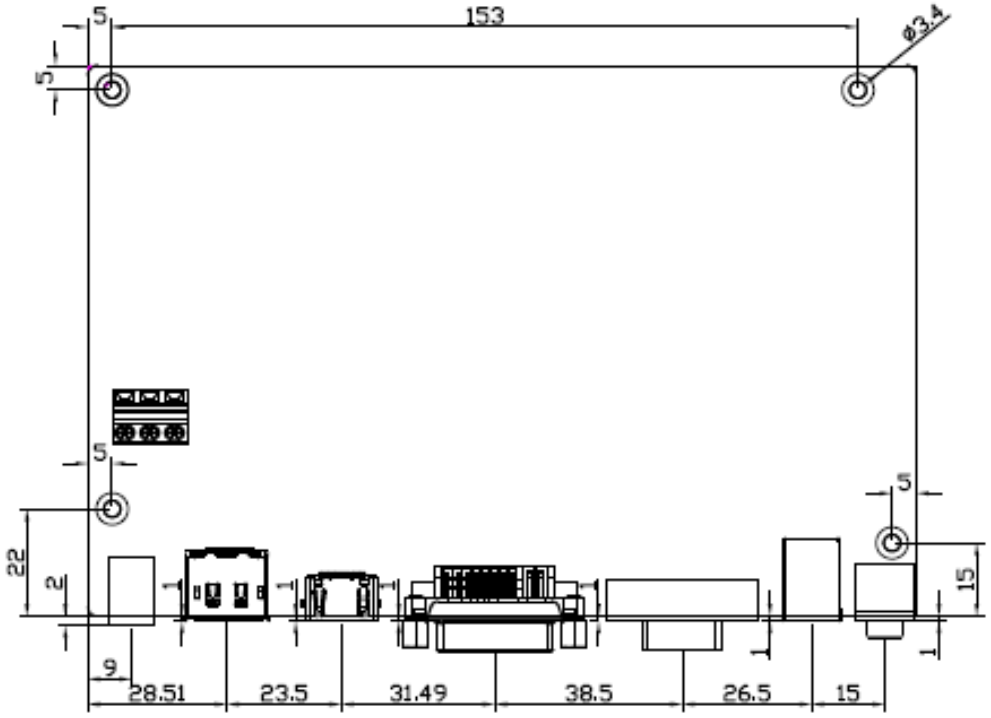

Figure 2.1: Dimension of TB-6802(Top)

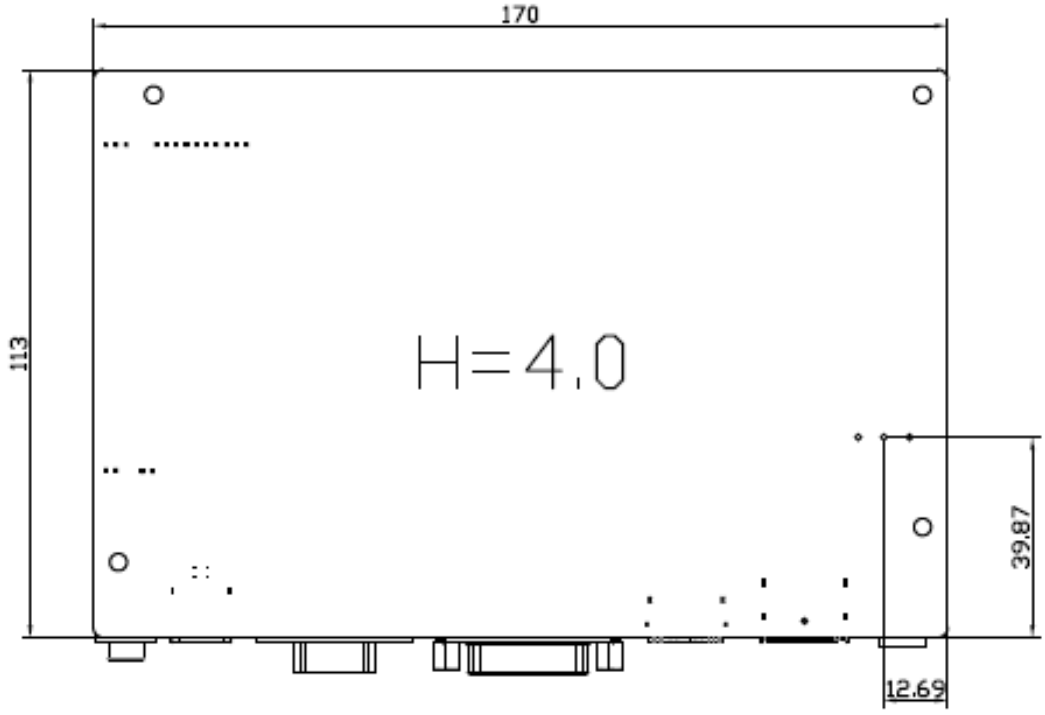

Figure 2.2: Dimension of TB-6802(Bottom)

2.3 Jumpers and Connectors Location

Board Top

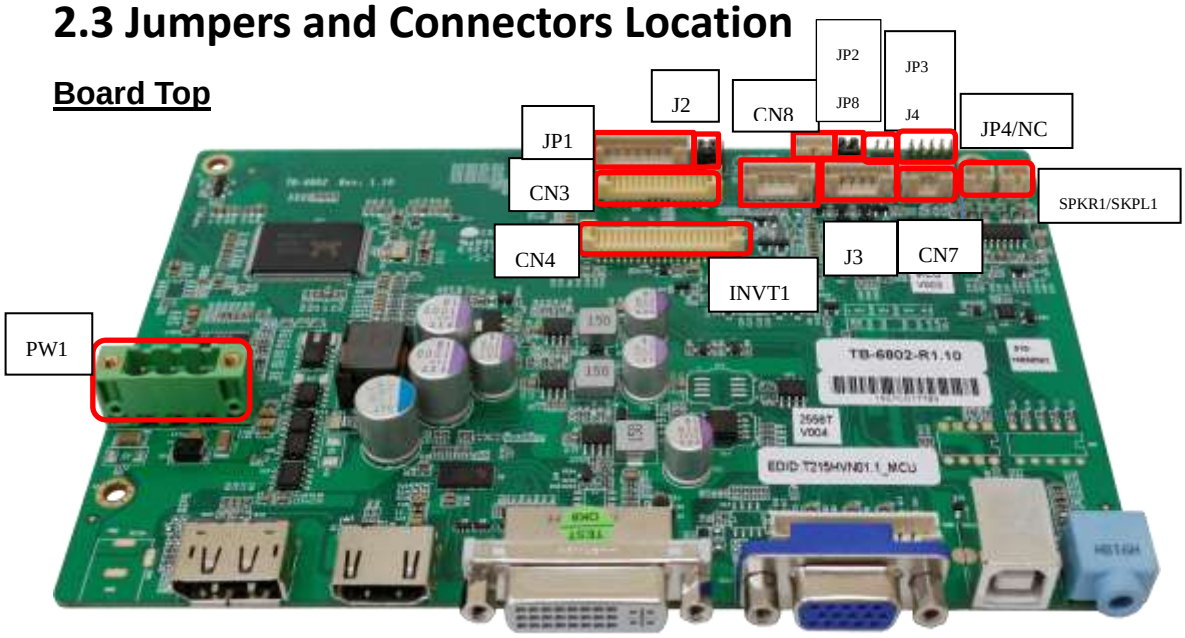

External I/O

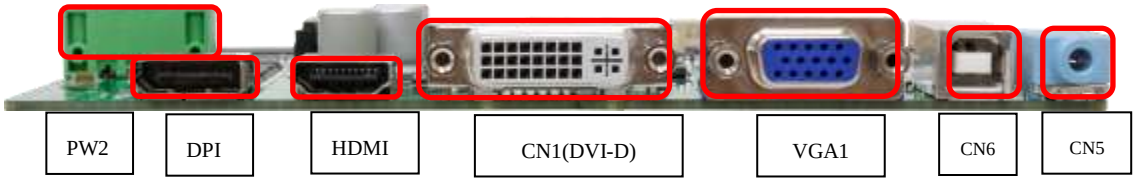

2.4 Jumpers Settings and Connectors

1. PW1:

(5.08mm Pitch 1x3 Pin Connector),DC24V power input connector。

Pin#	Power Input
1	DC+24V
2	Ground
3	FG

Model	Connector Type
TB-6802	2EHDVM-03P
TB-6802P	ELK508S-03P

2. PW2（Option）：

DC Jack

3. HDMI1（HDMI Input） ：

(HDMI Connector), High Definition Multimedia Interface connector, provide high-quality video and audio input.

Signal Name	Pin#	Pin#	Signal Name
DATA2+	1	2	DATA2 Shield
DATA2-	3	4	DATA1+
DATA1 Shield	5	6	DATA1-
DATA0+	7	8	DATA0 Shield
DATA0-	9	10	CLK+
HDMI CAB DET	11	12	CLK-
NC	13	14	NC
HDMI SCL	15	16	HDMI SDA
GND	17	18	HDMI 5V
HDMI HPD	19		

4.DP1（DisplayPort Input） :

(DisplayPort Connector), DisplayPort Interface connector, provide high-quality video and audio input.

Signal Name	Pin#	Pin#	Signal Name
LANE3-	1	2	GND
LANE3+	3	4	LANE2-
GND	5	6	LANE2+
LANE1-	7	8	GND
LANE1+	9	10	LANE0-
GND	11	12	LANE0+
GND	13	14	GND
AUX_CHP	15	16	DP CAB DET
AUX_CHN	17	18	DP HPD
RETURN	19	20	DP 3.3V

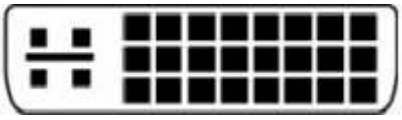

5.CN1（DVI-D Input）:

(DVI-D Connector), Digital Visual Interface-Digital input connector.

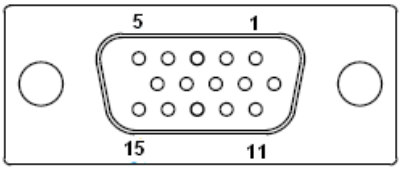

6. VGA1（VGA Input）:

(CRT DB15 Connector),Video Graphic Array Port, provide high-quality video input.

Pin#	Signal Name
1	CRT_RED
2	CRT_GREEN

3	CRT_BLUE
4	Ground
5	Ground
6	R-
7	G-
8	B-
9	VGA_5V
10	DET_VGA
11	Ground
12	DDCA-SDA
13	HSYNC
14	VSYNC
15	DDCA-SCL

8. CN3（eDP Output）:

(1.25mm Pitch 2x15 Connector) eDP output connector.

Signal Name	Pin#	Pin#	Signal Name
LVDS_12V	1	2	LVDS_12V
BKLT_CTRL	3	4	BKLT_EN
GND	5	6	GND
LVDS_VCC5	7	8	LVDS_VCC5
LVDS_VCC3	9	10	LVDS_VCC3
GND	11	12	GND
TXA3N	13	14	TXA3P
VTX_TX1N	15	16	VTX_TX1P
TXB0N	17	18	TXB0P
TXB1N	19	20	TXB1P
DPTX_AUX_N	21	22	DPTX_AUX_P
GND	23	24	GND
NC	25	26	AB_IICSCL
NC	27	28	AB_IICSDA
NC	29	30	TX2_HPD_2

9. CN4（LVDS Output）:

(1.25mm Pitch 2x20 Connector),For 24-bit LVDS output connector, the interface features dual channel 18/24-bit output.

Signal Name	Pin#	Pin#	Signal Name
LVDS_12V	1	2	LVDS_12V
BKLT_CTRL	3	4	BKLT_EN
GND	5	6	GND
LVDS_VCC5	7	8	LVDS_VCC5
LVDS_VCC3	9	10	LVDS_VCC3
GND	11	12	GND
TXA0N	13	14	TXA0P
TXA1N	15	16	TXA1P
TXA2N	17	18	TXA2P
TXA3N	19	20	TXA3P
TXACN	21	22	TXACP
TXB0N	23	24	TXB0P
TXB1N	25	26	TXB1P
TXB2N	27	28	TXB2P
TXBCN	29	30	TXB3P
TXB3N	31	32	TXBCP
LVDS_DDC_DET	33	34	GND
CPT-USB_N	35	36	CPT-USB_P
DDCSDA_AUTO	37	38	LVDS_USB_5V
DDCSCL_AUTO	39	40	LVDS_VCC3

Line out

10. CN5（Line Out）：

(Diameter 3.5mm Jack), Used for the connection of external audio source via a Line in cable.

11. CN6（USB2.0）：

(USB Type-B), For external USB2.0 signal input.

Pin#	Signal Name
1	USB 5V
2	USB-
3	USB+
4	GND

12. CN7（COM Input）:

(2.0mm 1x4 Pin wafer connector).For external RS-232 signal input.

Pin#	Signal Name
1	TXDD1
2	RXDD1
3	RTS1
4	GND

13. CN8 :

(2.0mm 1x3 Pin wafer connector), For external light sensor.

Pin#	Signal Name
1	5V
2	Sensor
3	GND

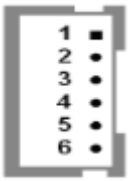

14. INVT1:

(2.0mm Pitch 1x6 wafer Pin Header), Backlight control connector for LVDS.

Pin#	Signal Name
1	LVDS_DC12V
2	LVDS_DC12V
3	Ground
4	Ground
5	BKLT_EN
6	BKLT_CTRL

15. JP1（OSD）:

(2.0mm 1x9 Pin wafer connector), On Screen Display menu Control connector.

Pin#	Signal Name
1	Power Key
2	R_LED
3	G_LED
4	GND
5	MENU Key
6	Down Key
7	UP Key
8	Select Key
9	NC

16. JP2 :

(2.0mm Pitch 1x3 Pin Header)

JP2 Pin#	Function
Close 1-2	Backlight Enable & Backlight PWM Level select 3.3V
Close 2-3	Backlight Enable & Backlight PWM Level select 5V

17. JP3 :

(2.0mm Pitch 1x3 Pin Header), Backlight control setting.

JP3 Pin#	Function
Close 1-2	For PWM Mode
Close 2-3	For DC Mode

18. JP4/NC（Debug Interface & Off Page） :

(2.0mm Pitch 2x5 Pin Header)

Pin#	Signal Name
1	NC
2	VCC3
3	NC
4	TICEDAT
5	NC
6	TICECLK
7	UART0_TX

8	nRST
9	UART0_RX
10	GND

19. JP8 :

(2.0mm Pitch 1x3 Pin Header),

JP8 Pin#	Function
Close 1-2	Backlight Control & Backlight PWM Level select 3.3V
Close 2-3	Backlight Control & Backlight PWM Level select 5V

20. J1（VGA input）:

(2.0mm Pitch 1X12 Pin Wafer),Video Graphic Array Port, Provide 12Pin cable to VGA output.

Pin#	Signal Name
1	GND
2	VSYNC
3	HSYNC
4	GND
5	CRT_RED
6	GND
7	CRT_GREEN
8	GND
9	CRT_BLUE
10	GND
11	DDCA-SDA
12	DDCA-SCL

21. J2:

(2.0mm Pitch 2X3 Pin Header), RS232 or USB input for PM6000 Touch Controller Signal jumper setting.

J2	PM6000 input Signal	CN4/USB output
Close（3-5,4-6）	NC	●
Close（1-3,2-4）	USB(CN6)	NC
Close（1-3,2-4）	RS232(CN7)	NC
Close（1-3,2-4）	RS232(CN7)	NC

22. J3:

(2.0mm Pitch 1X6 Pin Wafer),Touch Screen connecting Lines.

Pin#	4-Wire	5-Wire
1	N/A	Sense (S)
2	Right	LR
3	Left	LL
4	Bottom	UR
5	Top	UL
6	GND	GND

23. J4 : ***Reserved***

(2.0mm Pitch 1x2 Pin Header), 4-Wire/8-Wire resistive touch select.

24. SPKL1（Audio output）:

(2.0mm 1x2 Pin wafer connector),Amplifier left channel output.

Pin#	Signal Name
1	L+ (output)
2	L- (output)

26.SPKR1（Audio output）:

(2.0mm 1x2 Pin wafer connector), Amplifier right channel output.

Pin#	Signal Name
1	R+ (output)
2	R- (output)

Chapter 3 OSD

3.1 AD Board OSD Functions

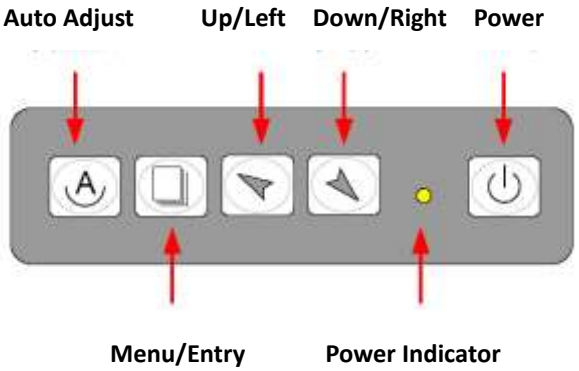

Power switch: To turn ON or OFF the power

Shift the icon to the right side or shift it up

Shift the icon to the left side or shift it down

Menu: To enter OSD menu for related icon and item.

Auto Button: One-touch auto adjustment

1.) Getting into Burn-in Mode

Before setting into a burn-in mode, first disconnect the AC power cord. Then press (don't let them go) the buttons until the AC power cord is connected and the "RGB" appears on the top left corner of your screen. Now it can be put into the burn-in mode for changing colors.

2.) Getting Out of Burn-in Mode

Before getting out of the burn-in mode, please first disconnect the AC power cord. Then press the button (If not workable, press the button and don't let them go) until the AC power cord is connected. Please don't let your fingers go until the AC power cord is connected again and the wording of "RGB" appears on the top left corner of your screen, and wait for 3 second. Under the non-signal entry situation, if **Cable Not Connected** is seen, exit is thus successfully made.

When the Burn-in Mode is Unable to Eradicate…

1.) If the "RGB" is still on the top left corner of the screen, press to enter "Miscellaneous" and choose "Reset", and then **Yes,** and press . When the screen goes black, disconnect power and repeat the above steps.

2.) If the "RGB" is not found, disconnect the AC power cord first. Then press the buttons (don't let them go) until the AC power cord is connected, and wait for 2 to 3 seconds. When "RGB" appears, repeat the above steps.

3.2 OSD Controls

To make any adjustment, select the following:

1. Press (Menu) to show the OSD menu or disable the OSD menu.
2. Select the icon that you wish to adjust with the (/ or +/-) key in the menu.
3. Press (Menu) and then choose the item with the (/ or +/-) key.
4. Press (Menu) and then adjust the quality with the (/ or +/-) key.

3.3 Main Menu

In the **PICTURE**, there are the following items:

- AutoBacklight
- Backlight
- Brightness:
- Contrast
- Sharpness
- Exit

In the **DISPLAY**, there are the following items:

- AutoAdjust
- H Position
- V Position
- Disp Rotate
- Exit

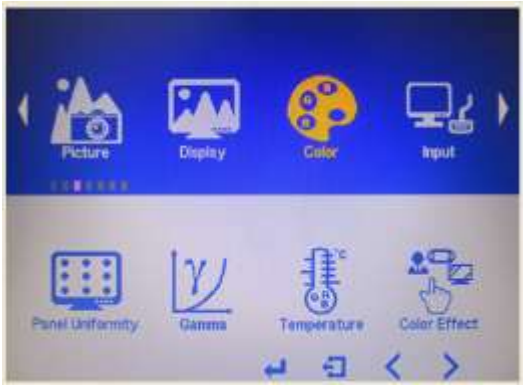

In the **COLOR**, there are the following items:

- Panel Uniformity
- Gamma
- Temperature
- Color Effect
- Exit

In the **INPUT**, there are the following items:

- A0:VGA
- D1:DP
- D3:HDMI
- Exit

In the **AUDIO**, there are the following items:

- Volume
- Mute
- Audio Source
- Exit

In the **OTHER**, there are the following items:

- Reset
- Menu Time
- OSD H Position
- OSD V Position
- Language
- Transparency
- Rotate
- Exit

Information part.

Chapter 4 Installation

This chapter describes how to install drivers and other software that will allow your touch screen work with different operating systems.

4.1 Windows 7 Universal Driver Installation for PenMount 6000 Series

Before installing the Windows 7 driver software, you must have the Windows 7 system installed and running on your computer. You must also have one of the following PenMount 6000 series controller or control boards installed: PM6500, PM6300.

4.1.1 Installing Software(Resistive Touch)

If you have an older version of the PenMount Windows 7 driver installed in your system, please remove it first. Follow the steps below to install the PenMount DMC6000 Windows 7 driver.

Step 1. Click **Next** to continue.

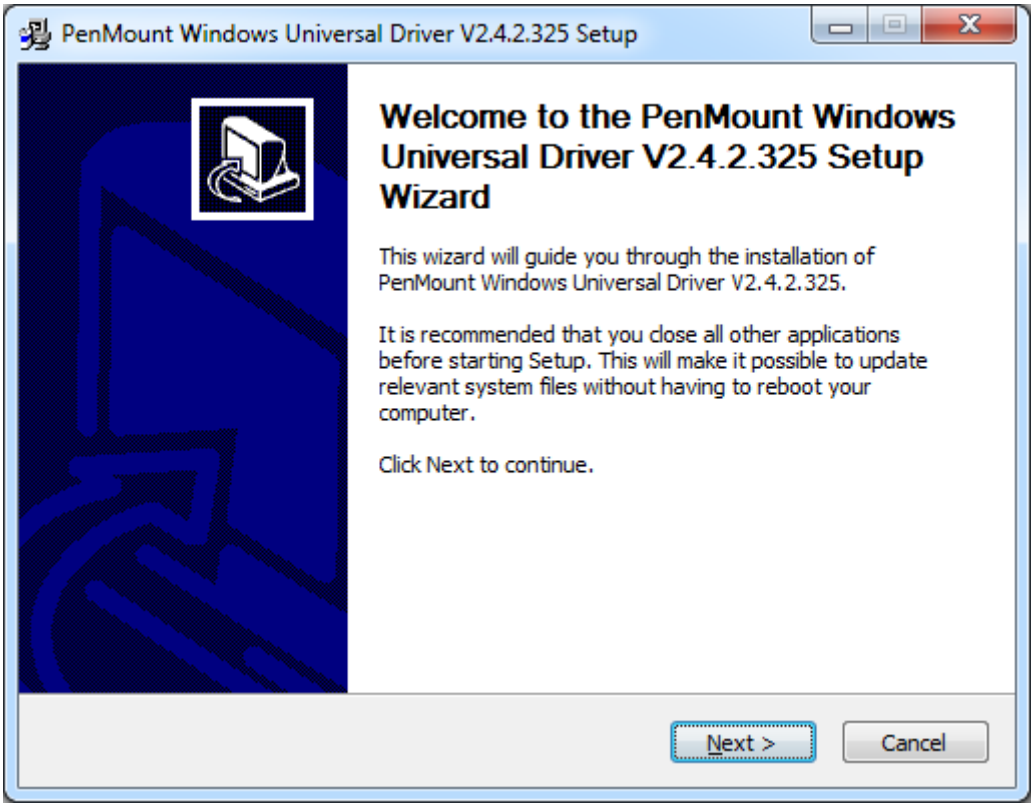

Step 2. Read the license agreement. Click **I Agree** to agree the license agreement.

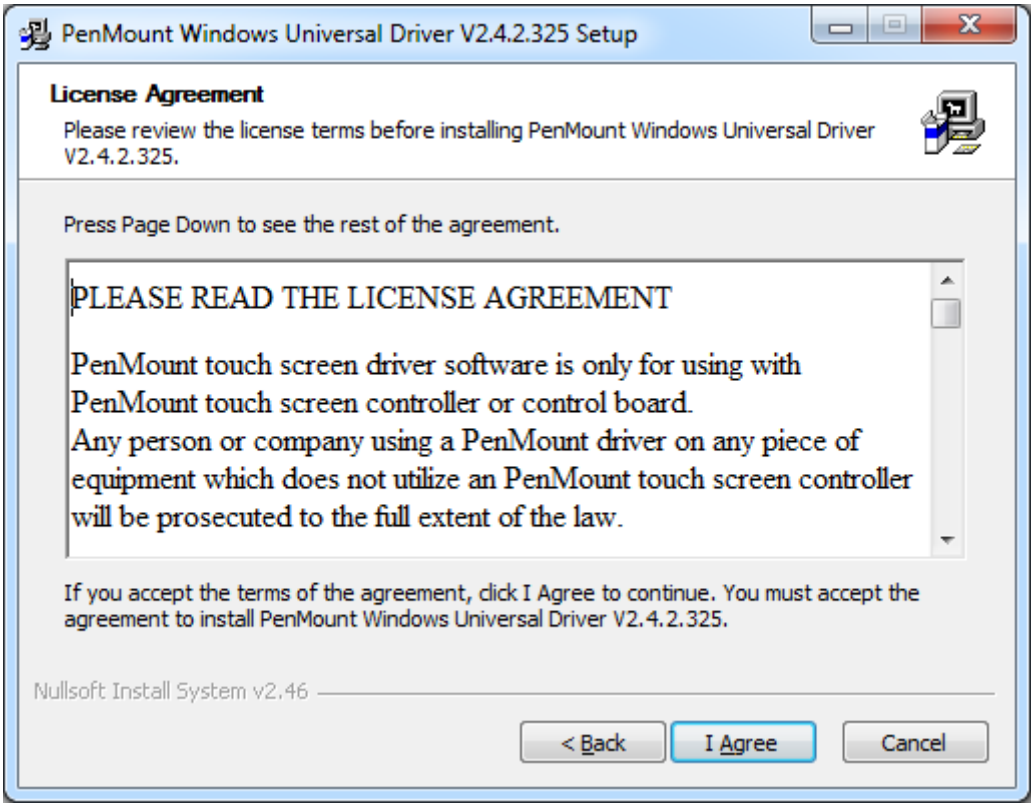

Step 3. Choose the folder in which to install PenMount Windows Universal Driver. Click **Install** to start the installation.

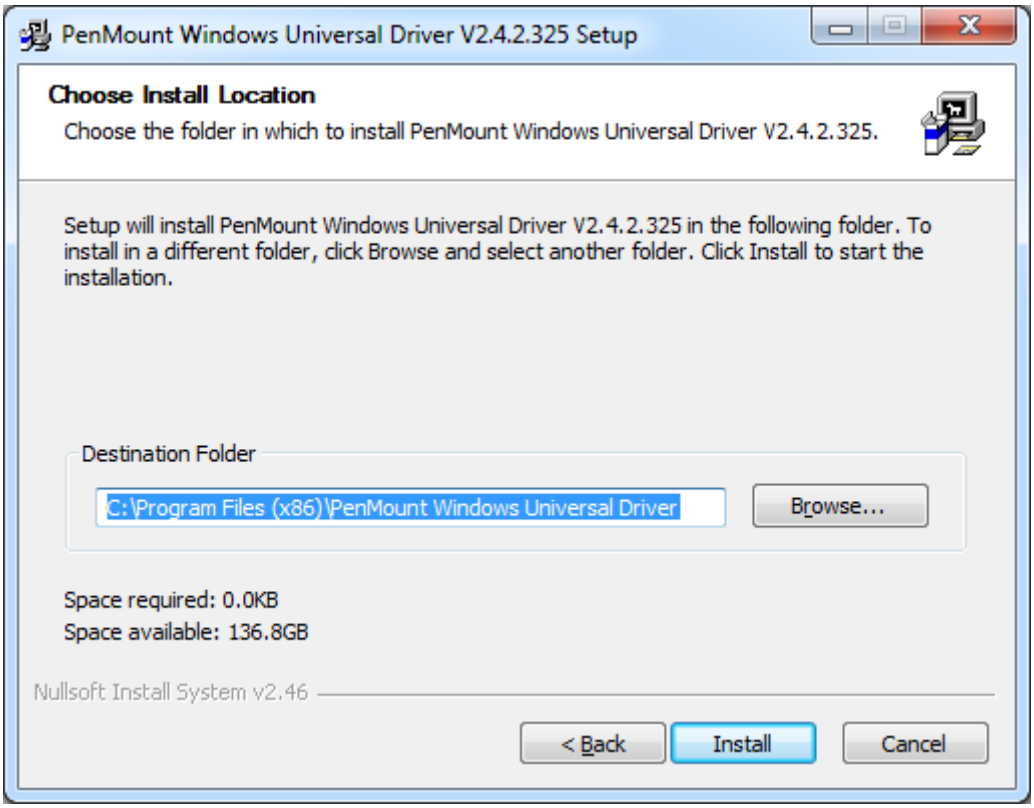

Step 4. Click **Yes** to continue.

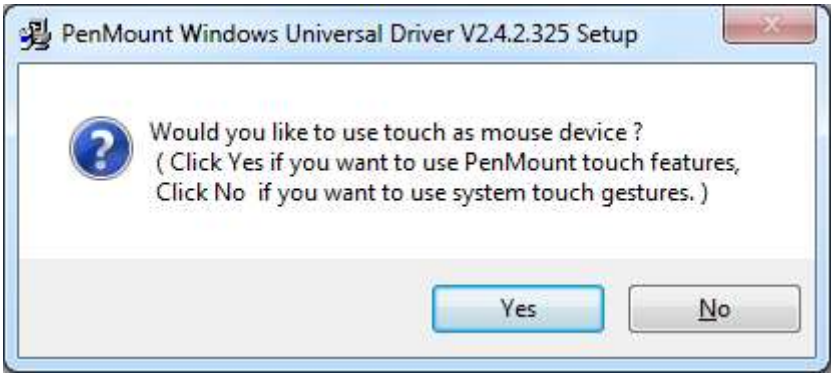

Step 5. Click **Finish** to complete installation.

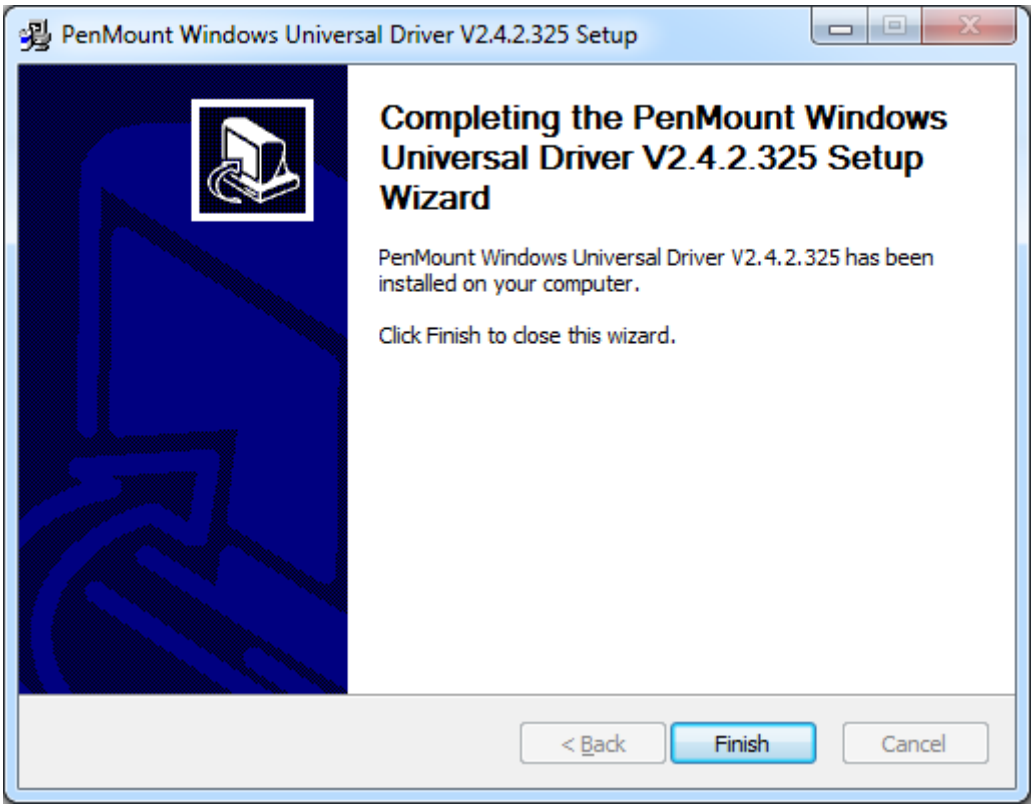

4.1.2 Installing Software (Projected Capacitive)

Step 1. Click **Next** to continue.

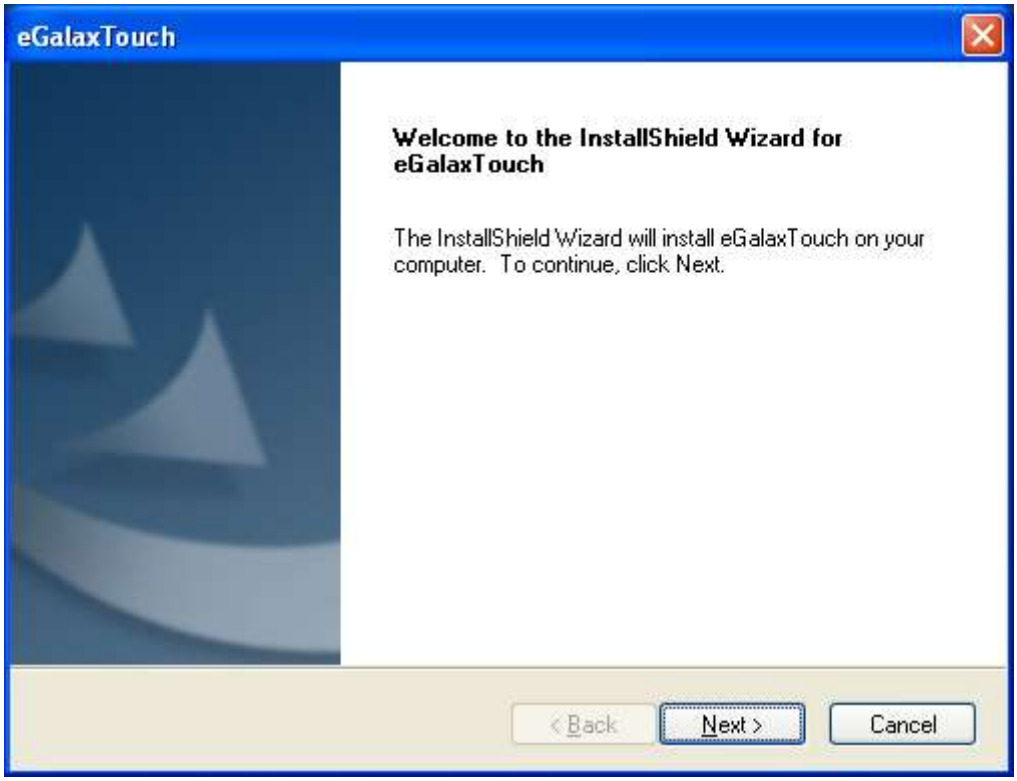

Step 2. Select **I accept the terms of the license agreement**. Click **Next.**

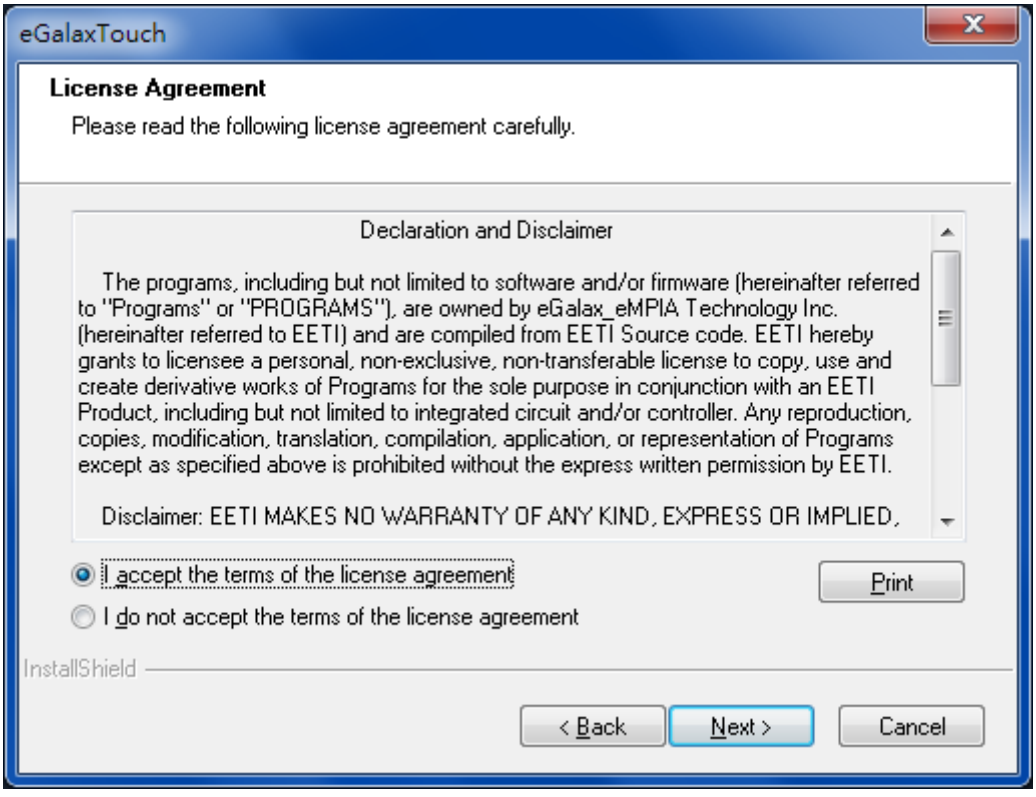

Step.3. Click **Next** to continue.

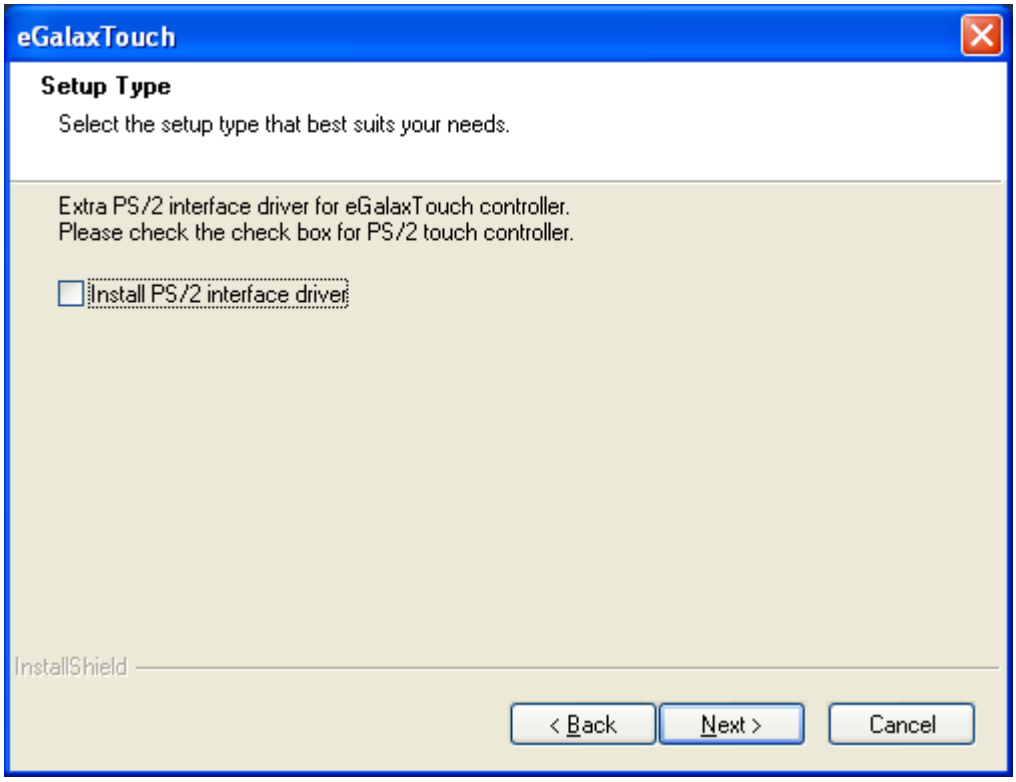

Step 4. Click **Install RS232 interface driver**.

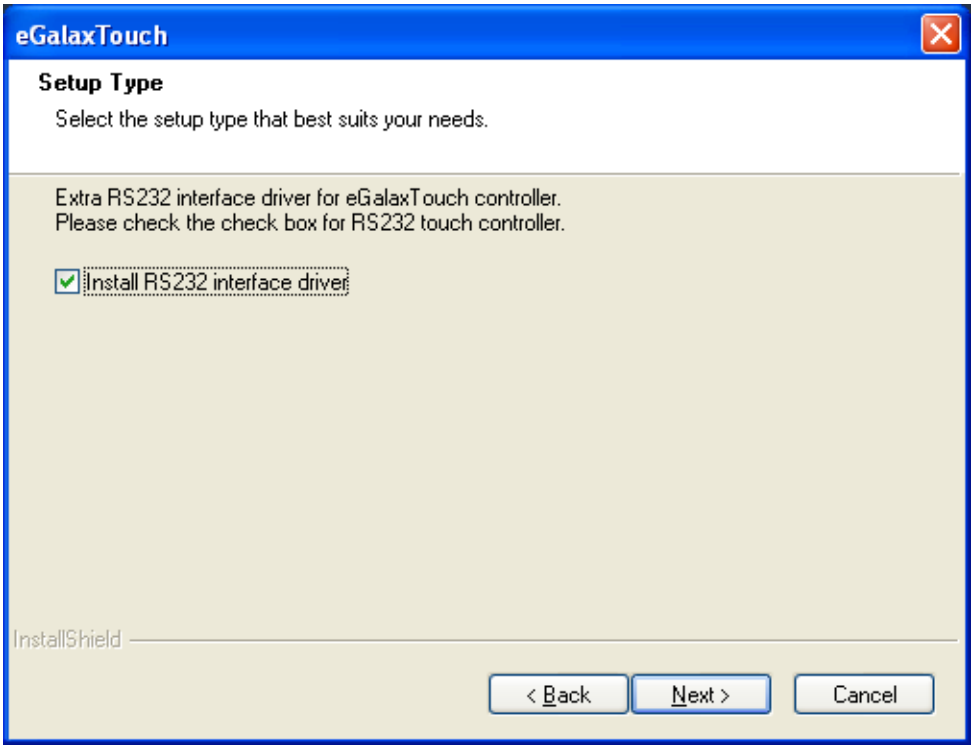

Step 5. Select **None**. Click **Next**.

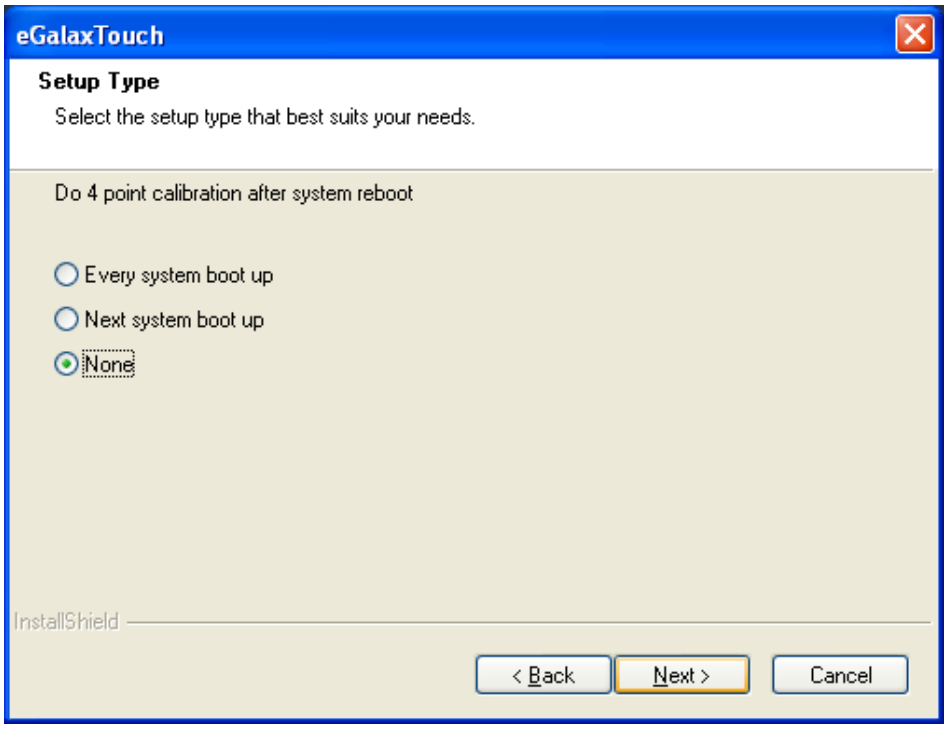

Step 6. Click **OK.**

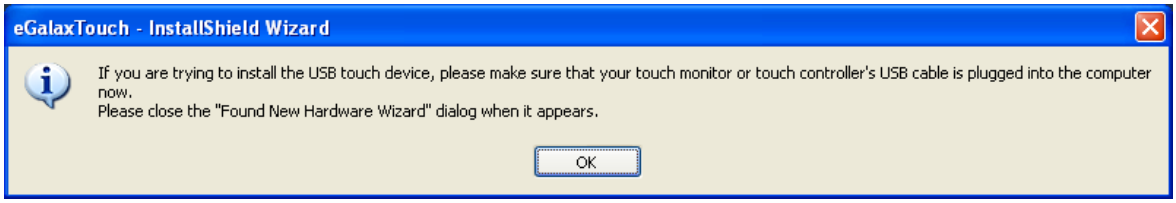

Step 7. Click **Support Muti-Monitor System**. Click **Next.**

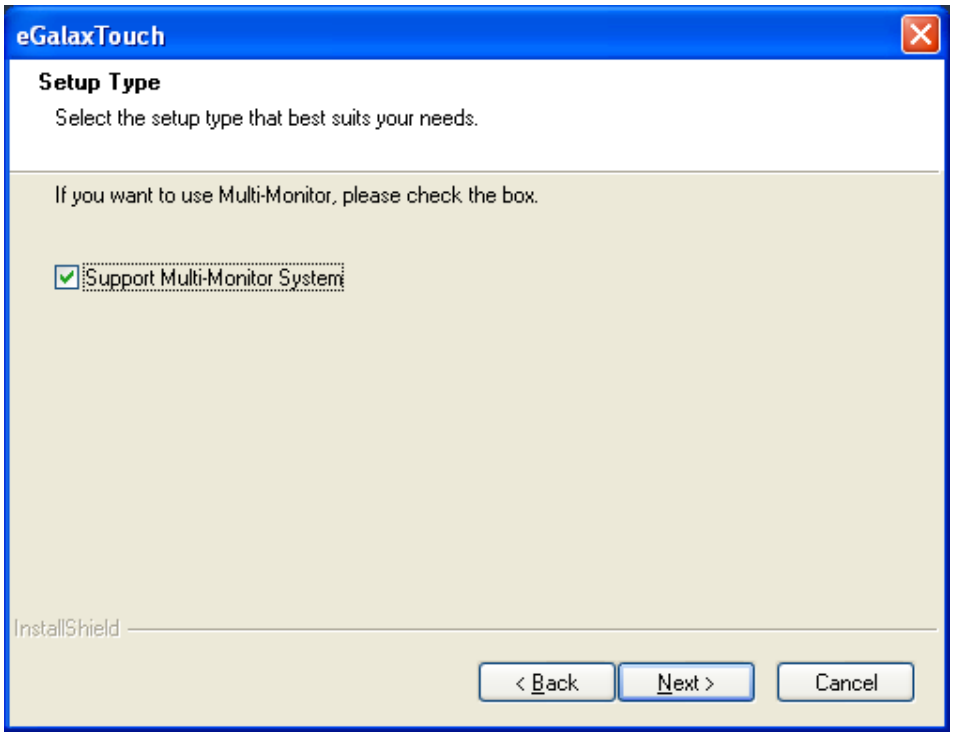

Step 8. Go to **C:\Program Files\eGalaxTouch**. Click **Next**.

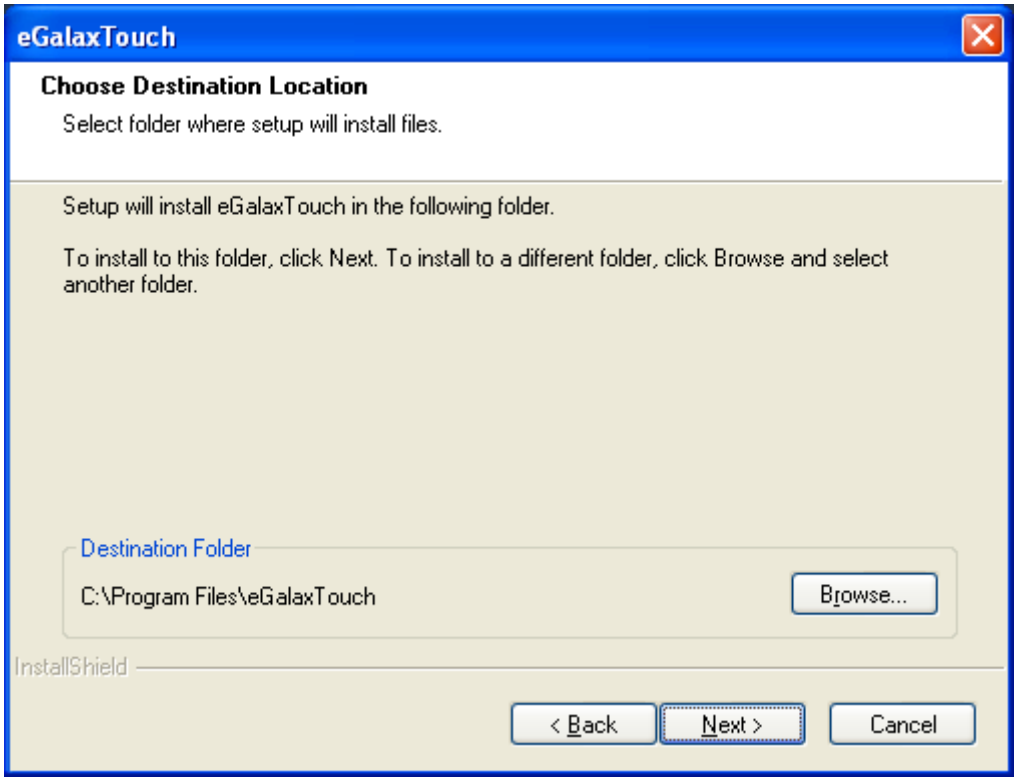

Step 9. Click **Next.**

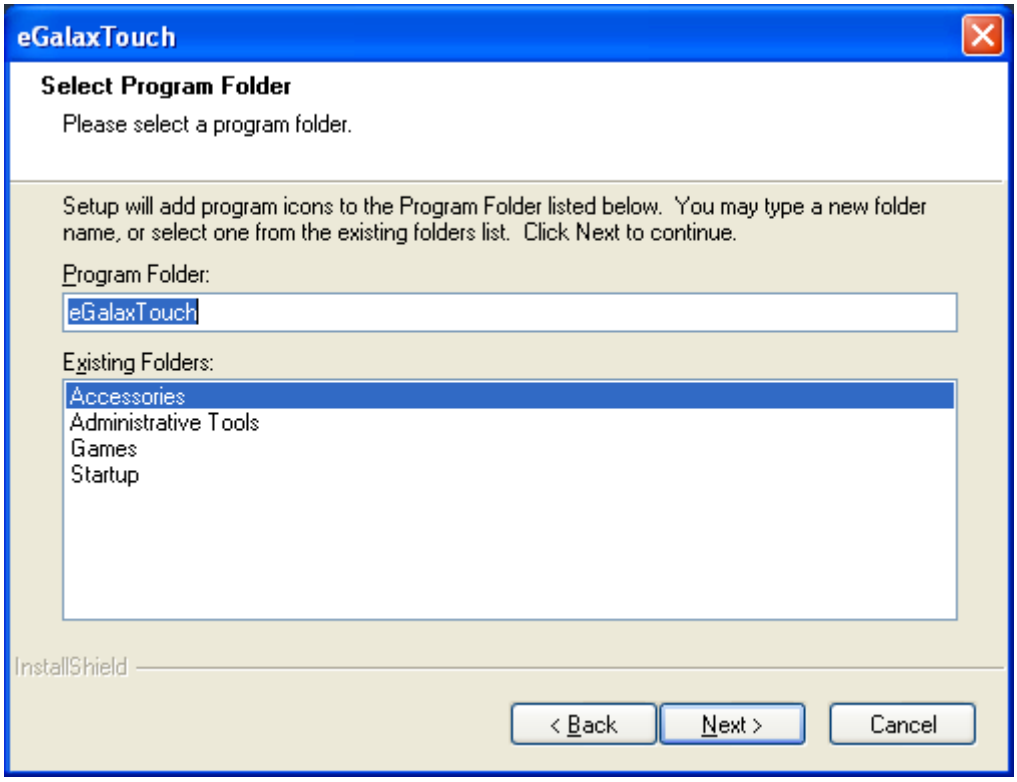

Step 10. Click **Create a eGalaxTouch Utility shortcut on desktop**. Click **Next**.

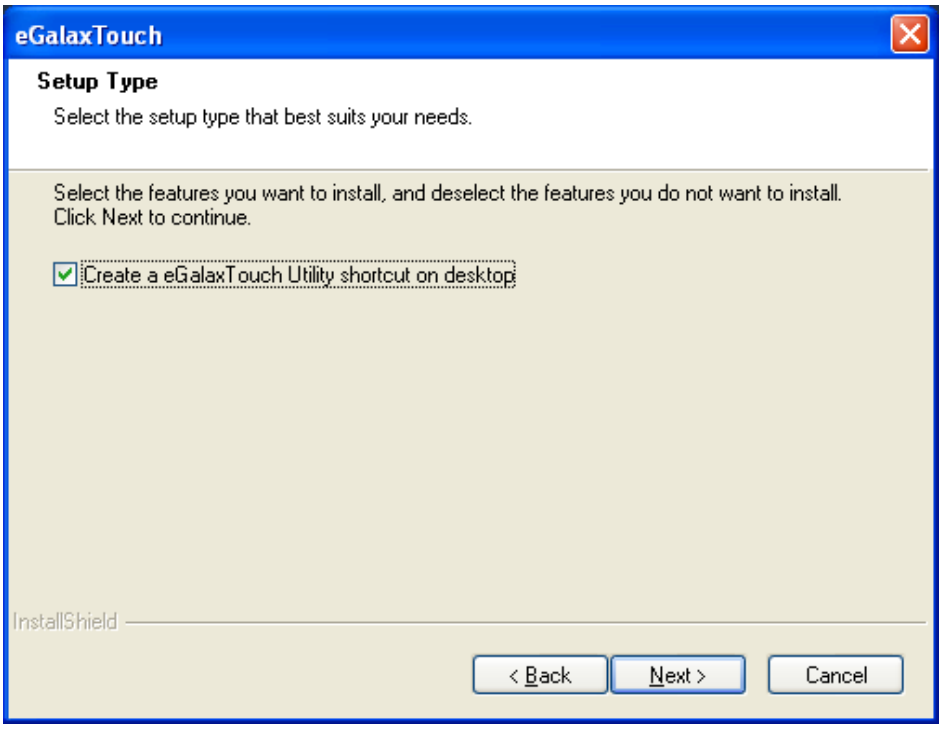

Step 11. Wait for installation.

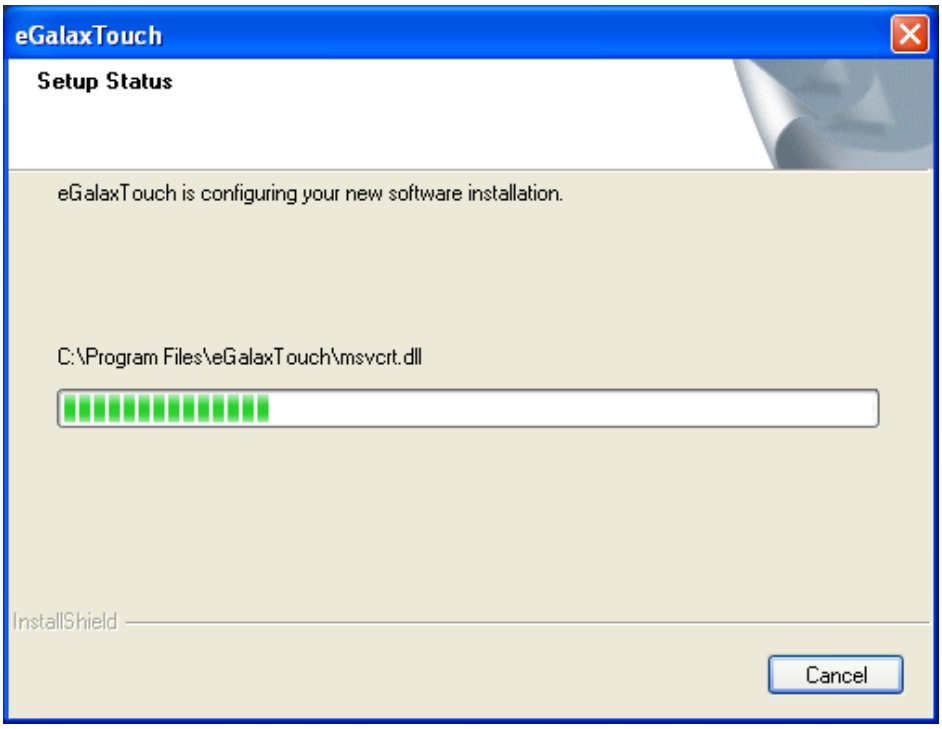

Step 12. Click **Yes** to do 4 point calibration.

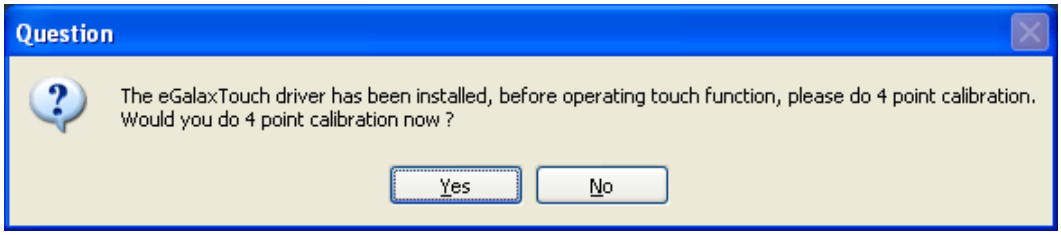

4.2 Software Functions

4.2.1 Software Functions(Resistive Touch)

Upon rebooting, the computer automatically finds the new 6000 controller board. The touch screen is connected but not calibrated. Follow the procedures below to carry out calibration.

1. After installation, click the PenMount Monitor icon “PM” in the menu bar.
2. When the PenMount Control Panel appears, select a device to “Calibrate.”

PenMount Control Panel(Resistive Touch)

The functions of the PenMount Control Panel are **Device, Multiple Monitors** ,**Tools** and **About**, which are explained in the following sections.

Device

In this window, you can find out that how many devices be detected on your system.

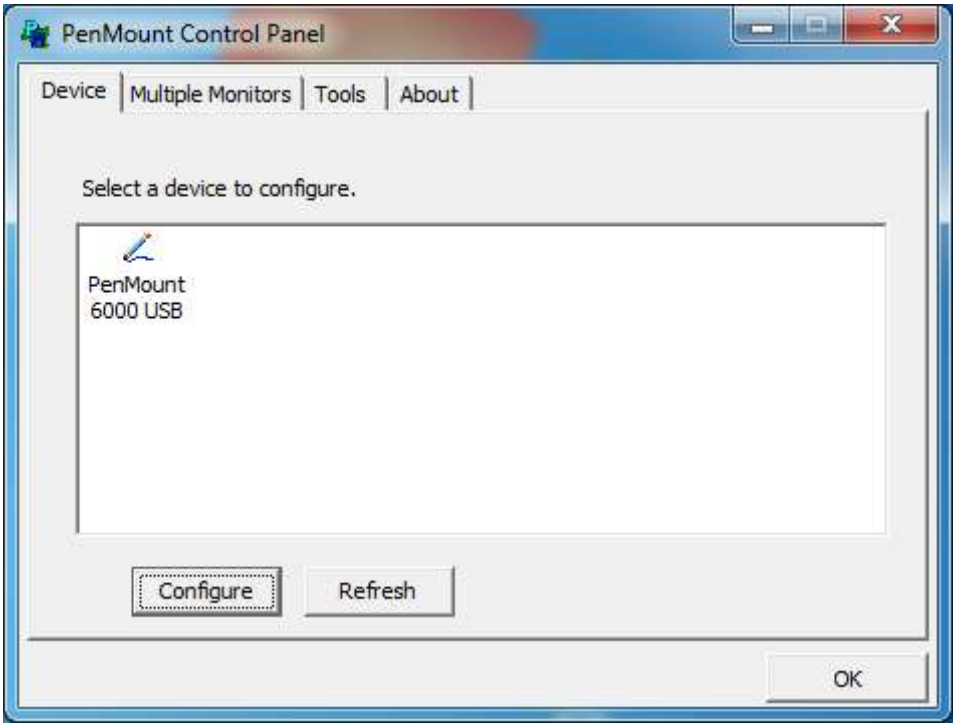

Calibrate

This function offers two ways to calibrate your touch screen. ‘Standard Calibration’ adjusts most touch screens. ‘Advanced Calibration’ adjusts aging touch screens.

Standard Calibration	**Click this button and arrows appear pointing to red squares. Use your finger or stylus to touch the red squares in sequence. After the fifth red point calibration is complete. To skip, press 'ESC'.**
Advanced Calibration	**Advanced Calibration uses 4, 9, 16 or 25 points to effectively calibrate touch panel linearity of aged touch screens. Click this button and touch the red squares in sequence with a stylus. To skip, press ESC'.**

Step 1. Please select a device then click "Configure". You can also double click the device too.

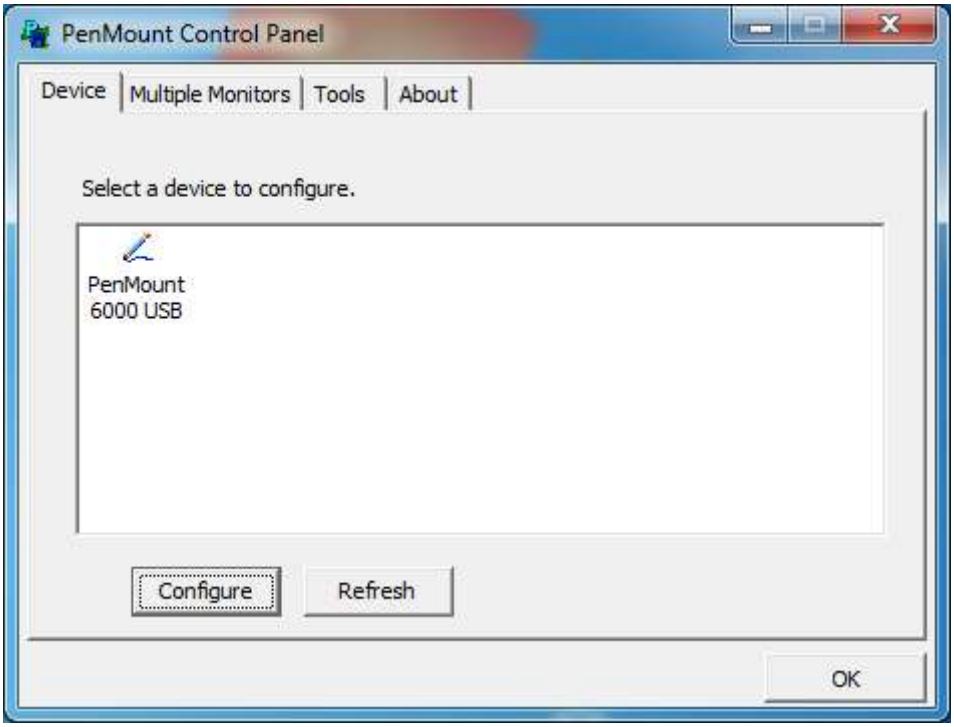

Step 2. Click "**Standard Calibration**" to start calibration procedure

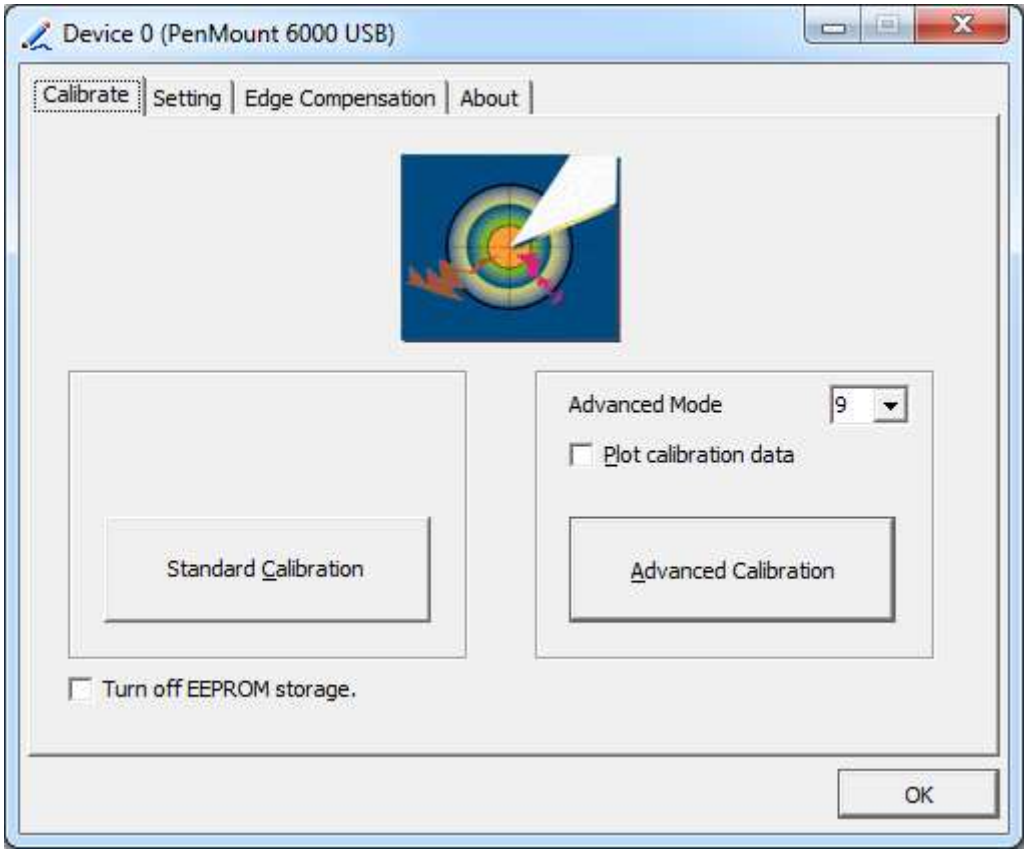

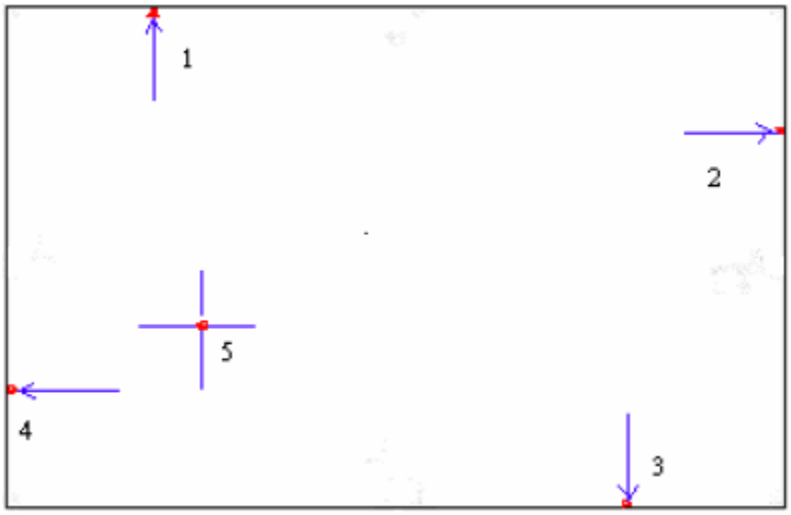

NOTE: The older the touch screen, the more Advanced Mode calibration points you need for an accurate calibration. Use a stylus during Advanced Calibration for greater accuracy. Please follow the step as below:

Step 3. Select **Device** to calibrate, then you can start to do **Advanced Calibration**.

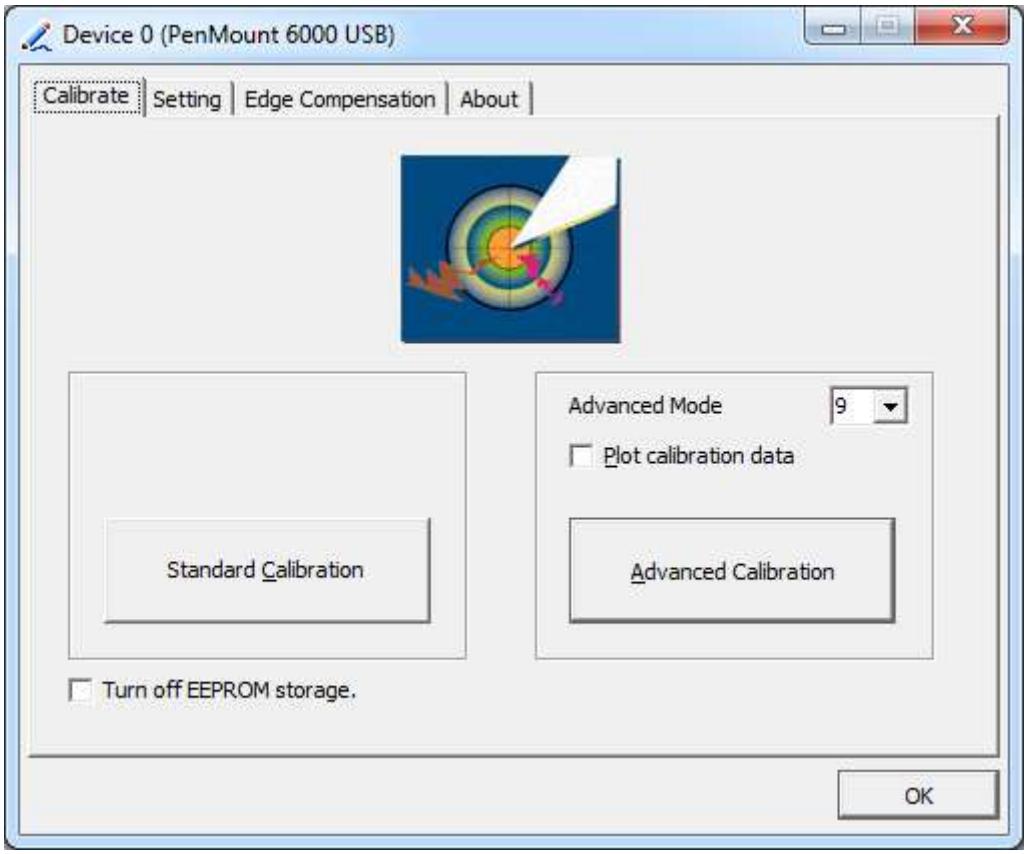

NOTE: Recommend to use a stylus during Advanced Calibration for greater accuracy.

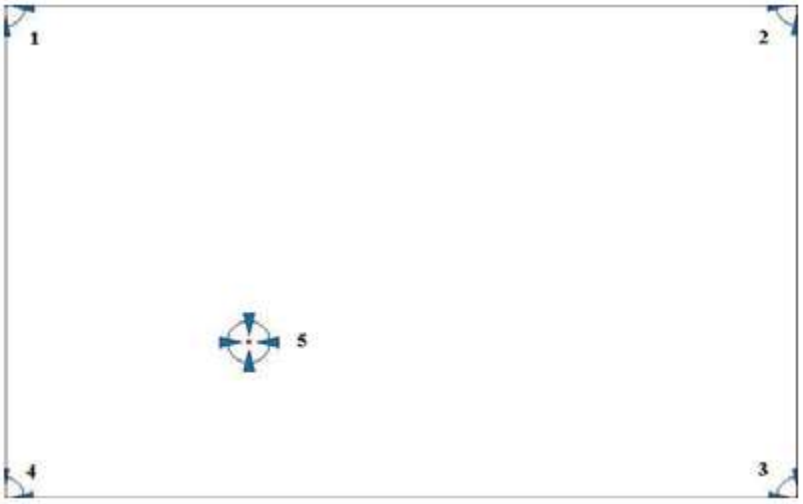

Plot Calibration Data	**Check this function and a touch panel linearity comparison graph appears when you have finished Advanced Calibration. The blue lines show linearity before calibration and black lines show linearity after calibration.**
Turn off EEPROM storage	**The function disable for calibration data to write in Controller. The default setting is Enable.**

Setting

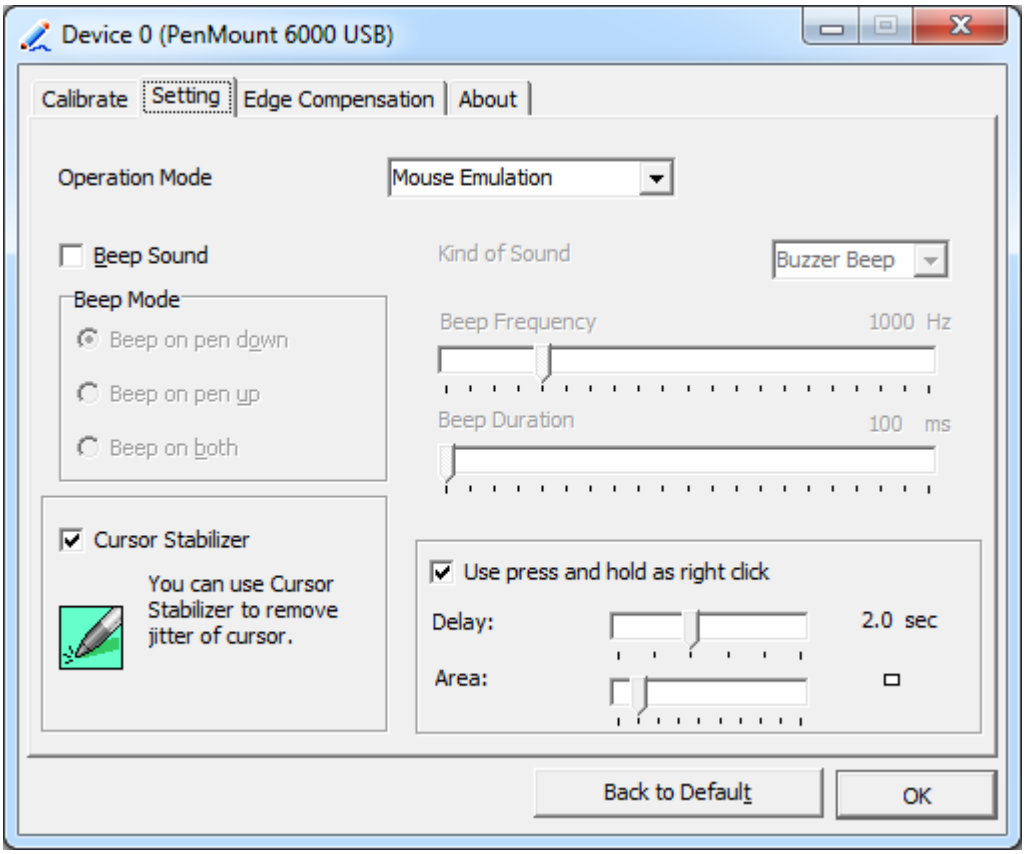

Touch Mode	**This mode enables and disables the mouse's ability to drag on-screen icons – useful for configuring POS terminals.** **Mouse Emulation – Select this mode and the mouse functions as normal and allows dragging of icons.** **Click on Touch – Select this mode and mouse only provides a click function, and dragging is disables.**
Beep Sound	**Enable Beep Sound – turns beep function on and off** **Beep on Pen Down – beep occurs when pen comes down** **Beep on Pen Up – beep occurs when pen is lifted up** **Beep on both – beep occurs when comes down and lifted up** **Beep Frequency – modifies sound frequency** **Beep Duration – modifies sound duration**
Cursor Stabilizer	**Enable the function support to prevent cursor shake.**
Use press and hold as right click	**You can set the time out and area for you need.**

Edge Compensation

You can use Edge Compensation to calibrate more subtly.

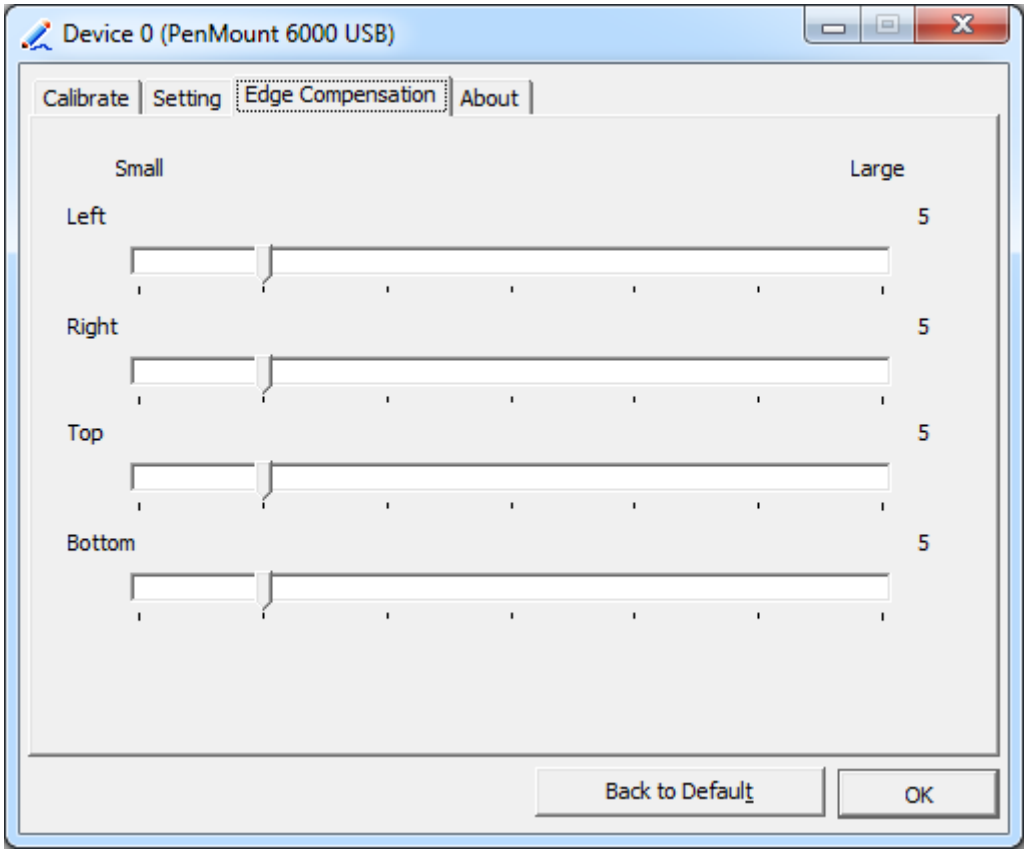

About

This panel displays information about the PenMount controller and driver version.

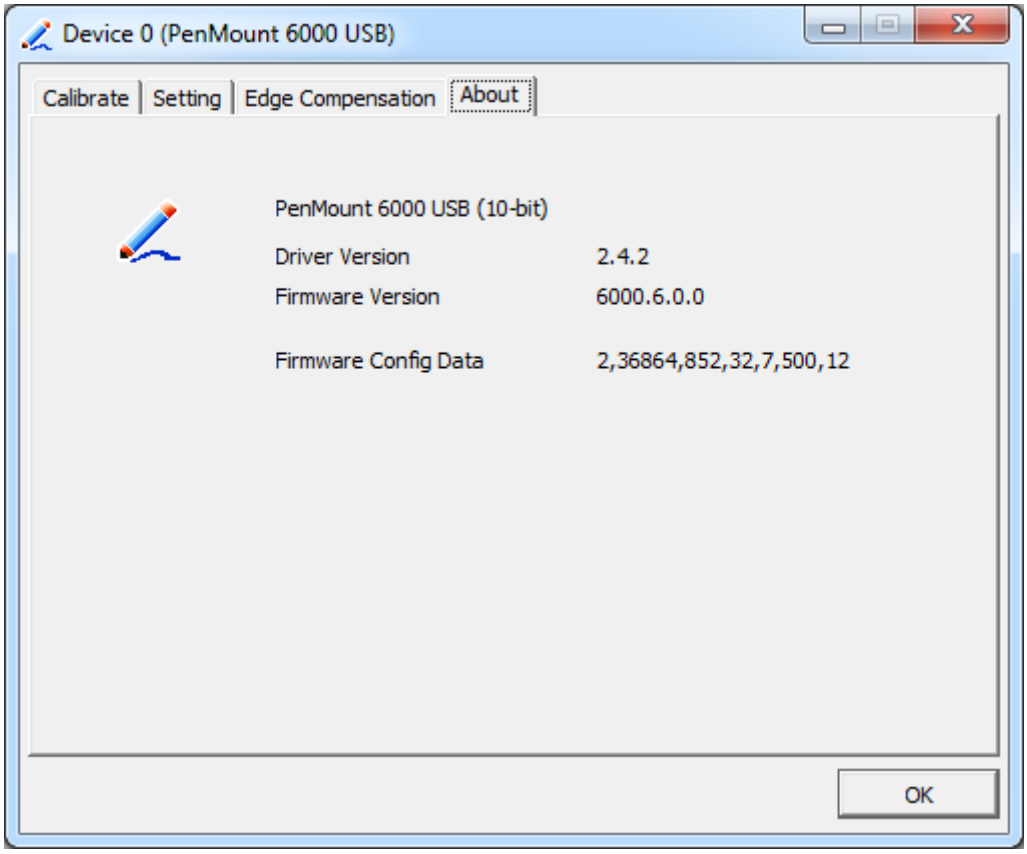

Multiple Monitors

Multiple Monitors support from two to six touch screen displays for one system. The PenMount drivers for Windows 7 support Multiple Monitors. This function supports from two to six touch screen displays for one system. Each monitor requires its own PenMount touch screen control board, either installed inside the display or in a central unit. The PenMount control boards must be connected to the computer COM ports via the USB interface. Driver installation procedures are the same as for a single monitor. Multiple Monitors support the following modes:

Windows Extends Monitor Function
Matrox DualHead Multi-Screen Function
nVidia nView Function

NOTE: The Multiple Monitor function is for use with multiple displays only. Do not use this function if you have only one touch screen display. Please note once you turn on this function the rotating function is disabled.

Enable the multiple display function as follows:

1. Check the **Enable Multiple Monitor Support** box; then click **Map Touch Screens**

to assign touch controllers to displays.

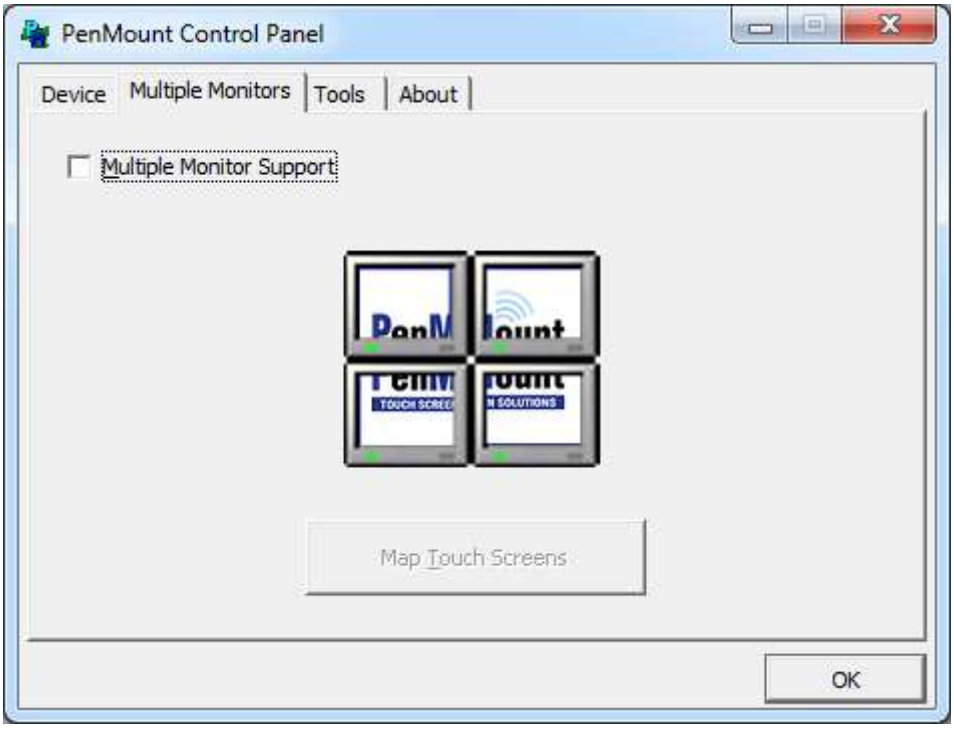

2. When the mapping screen message appears, click **OK.**
3. Touch each screen as it displays “Please touch this monitor”. Following this sequence and touching each screen is called **mapping the touch screens.**

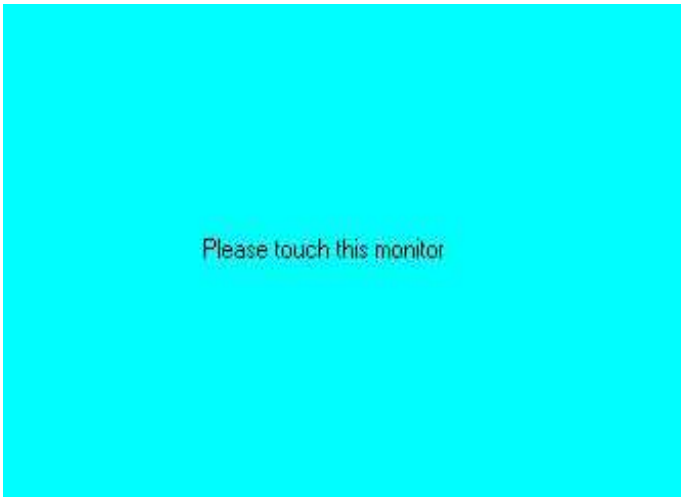

4. Touching all screens completes the mapping and the desktop reappears on the monitors.
5. Select a display and execute the “Calibration” function. A message to start calibration appears. Click **OK.**

6. “Touch this screen to start its calibration” appears on one of the screens. Touch the screen.
7. “Touch the red square” messages appear. Touch the red squares in sequence.
8. Continue calibration for each monitor by clicking **Standard Calibration** and touching the red squares.

NOTES:

1. If you use a single VGA output for multiple monitors, please do not use the **Multiple Monitor** function. Just follow the regular procedure for calibration on each of your desktop monitors.
2. The Rotating function is disabled if you use the Multiple Monitor function.
3. If you change the resolution of display or screen address, you have to redo **Map Touch Screens,** so the system understands where the displays are.

About

This panel displays information about the PenMount controller and this driver version.

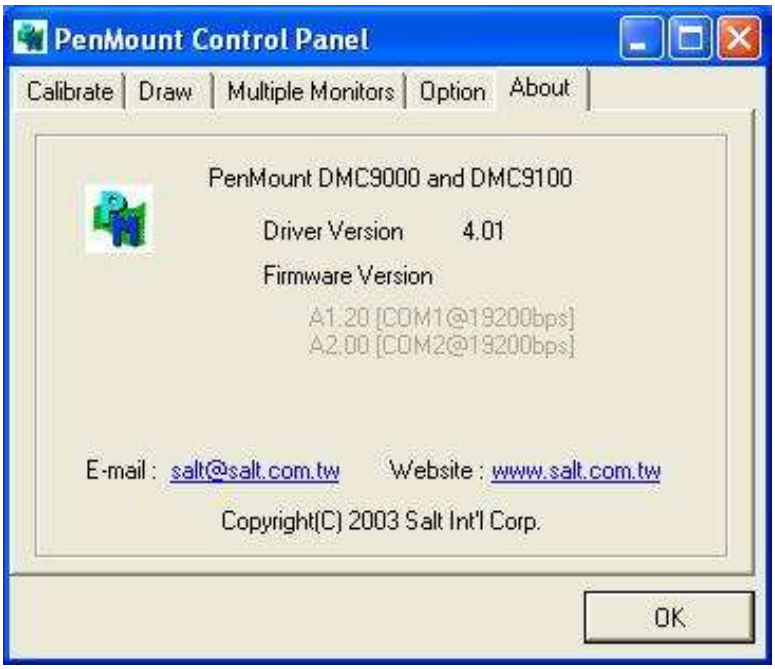

PenMount Monitor Menu Icon

The PenMount monitor icon (PM) appears in the menu bar of Windows 7 system when you turn on PenMount Monitor in PenMount Utilities.

PenMount Monitor has the following function

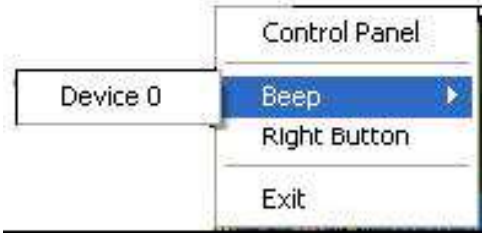

Control Panel	**Open Control Panel Windows**
Beep	**Setting Beep function for each device**
Right Button	**When you select this function, a mouse icon appears in the right-bottom of the screen.** **Click this icon to switch between Right and Left Button functions.**
Exit	**Exits the PenMount Monitor function.**

Configuring the Rotate Function

1. Install the rotation software package.
2. Choose the rotate function (0°, 90°, 180°, 270°) in the 3rd party software. The calibration screen appears automatically. Touch this point and rotation is mapped.

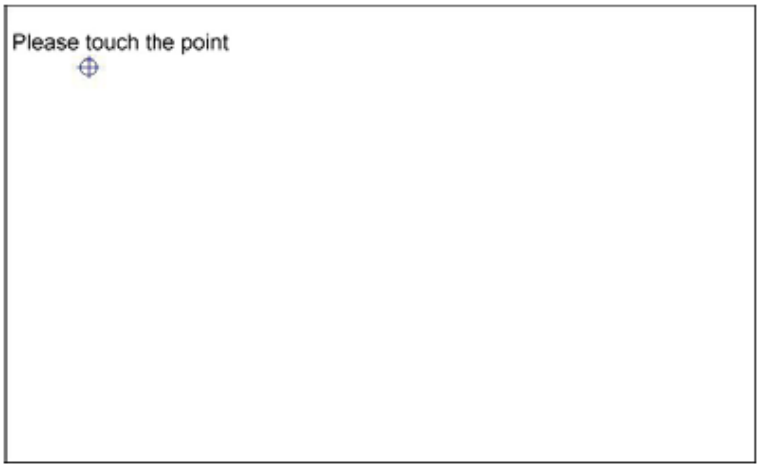

NOTE: The Rotate function is disabled if you use Monitor Mapping

4.2.2 Software Functions(Projected Capacitive)

General

In this window, you can see there is USB Controller. Click **OK** to continue.

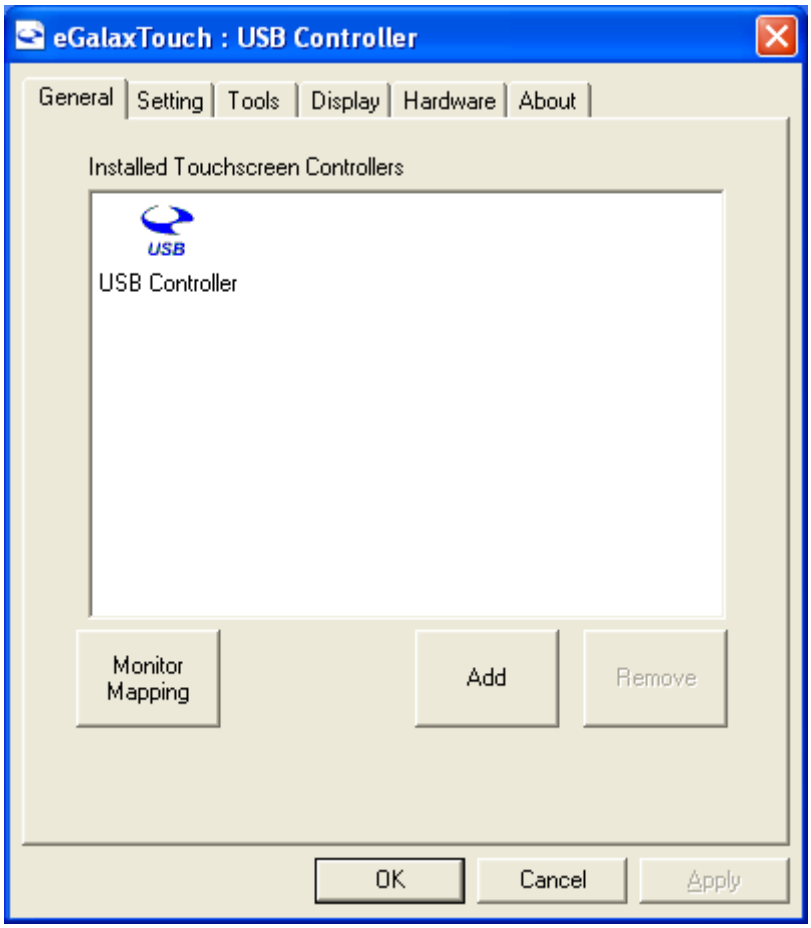

Monitor Mapping

to adjust touch panel

Add

to search for device

Setting

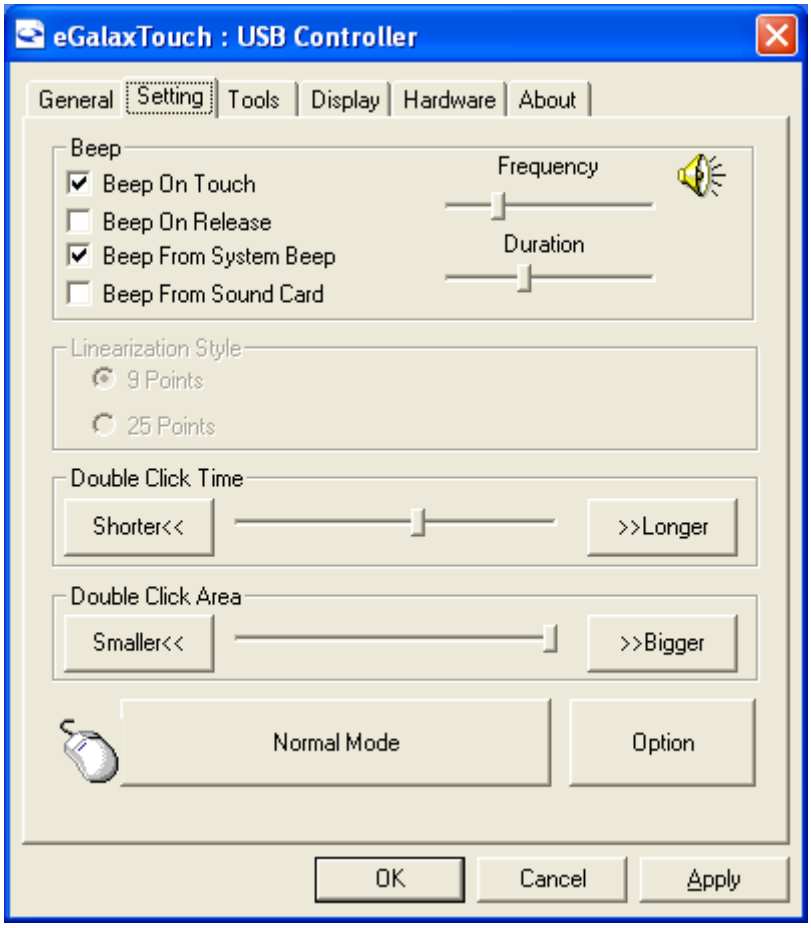

Beep

Beep On Touch

Beep On Release

Beep From System Beep

Beep From Sound Card

Linearization Style

9 points

25 points

Double Click Time

Shorter

Longer

Double Click Area

Smaller

Bigger

Normal mode

Simulate the mouse mode

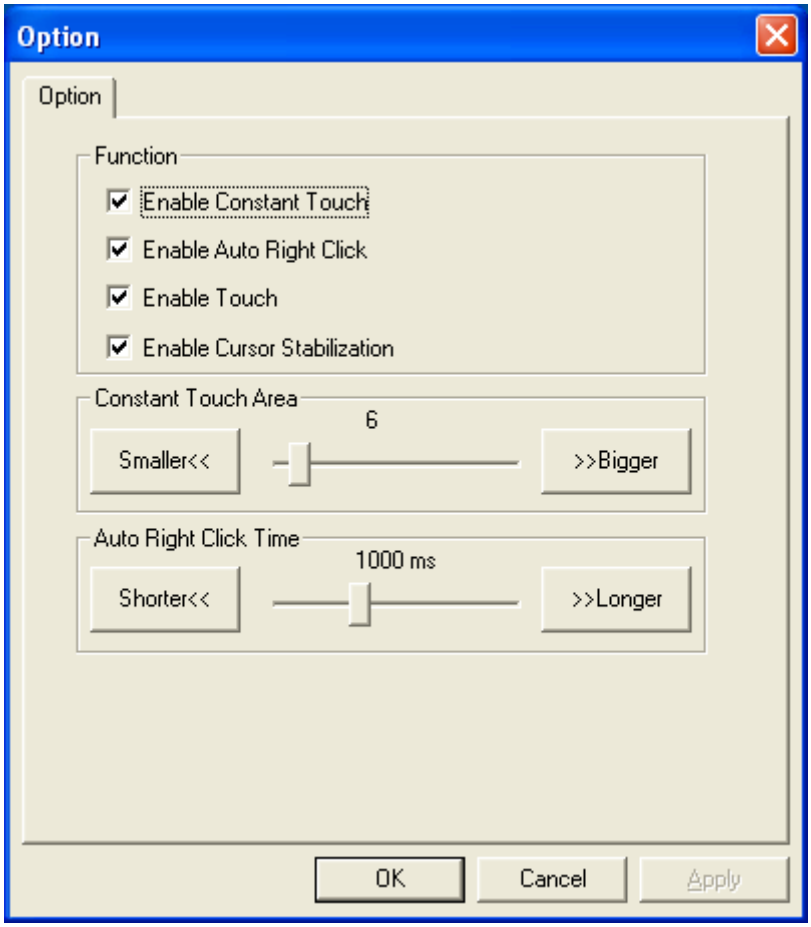

Option

Function

Enable Constant Touch

Enable Auto Right Click

Enable Touch

Enable Cursor Stabilization

Constant Touch Area

Auto Right Click Time

Tools

Click **OK** to continue the settings.

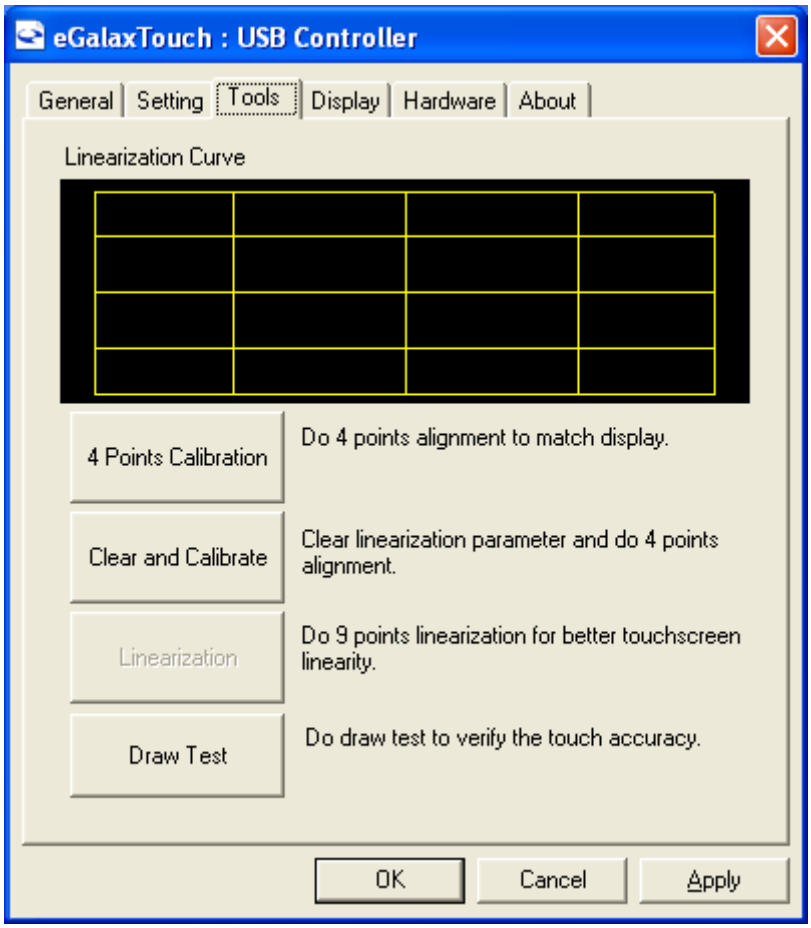

4 Points Calibration

Do 4 points alignment to match display.

Clear and Calibrate

Clear linearization parameter and do 4 points alignment.

Linearization

Do 9 points linearization for better touchscreen linearity.

Draw Test

Do draw test to verify the touch accuracy.

Display

In this window, it shows the mode of display.

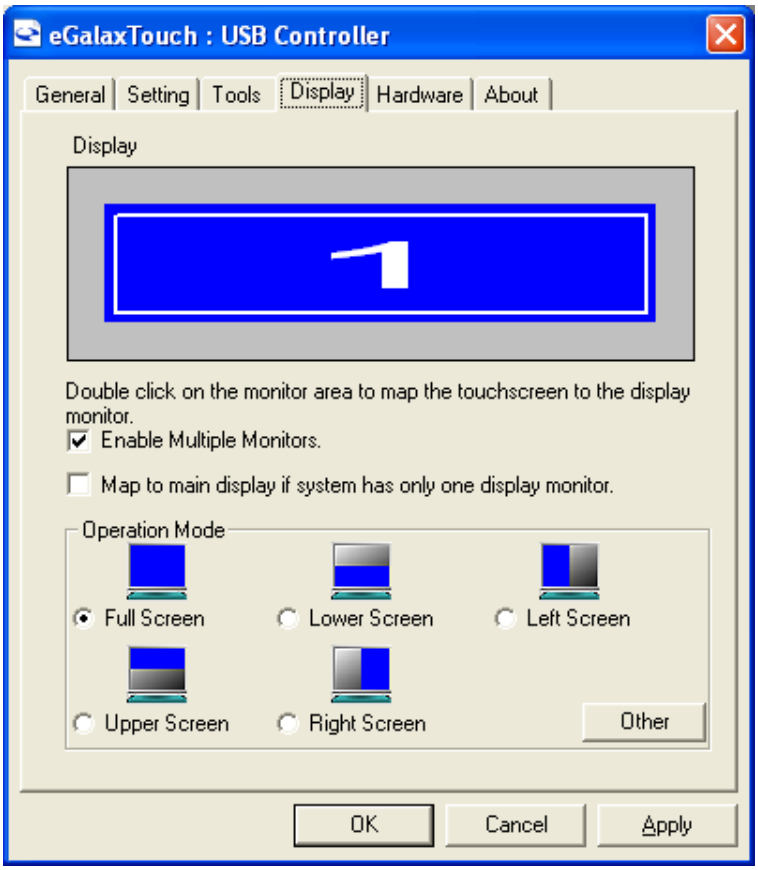

Enable Multiple Monitors.

Map to main display if system has only one display monitor

Full Screen

Lower Screen

Left Screen

Upper Screen

Right Screen

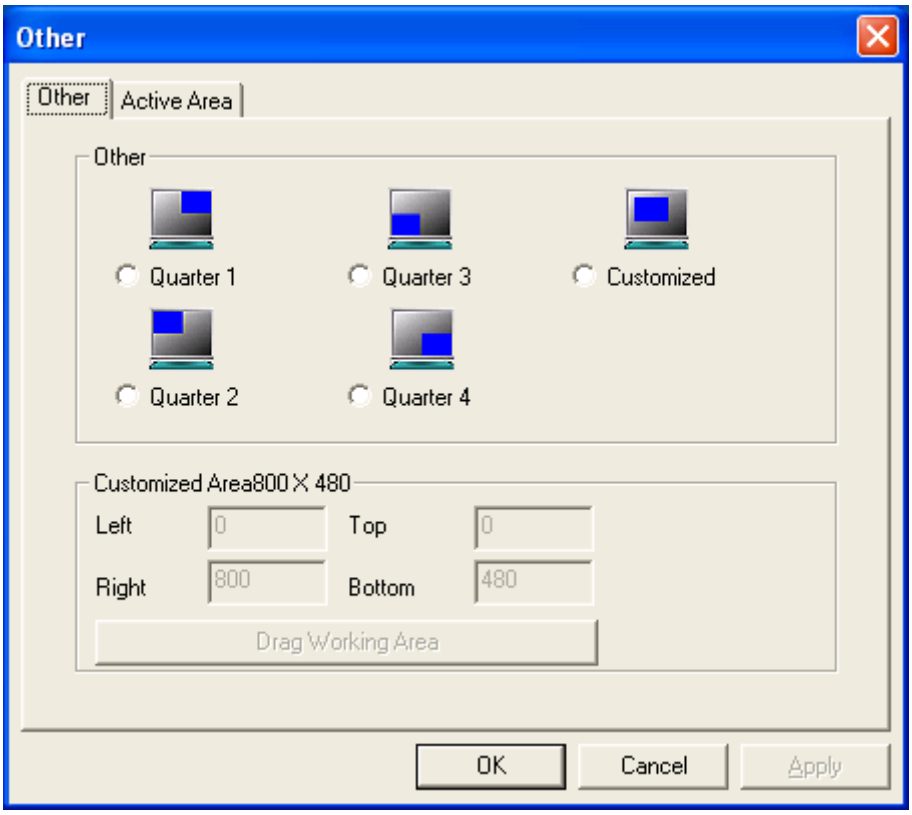

Other

Other mode of display. Quarter1~4 and Customized area.

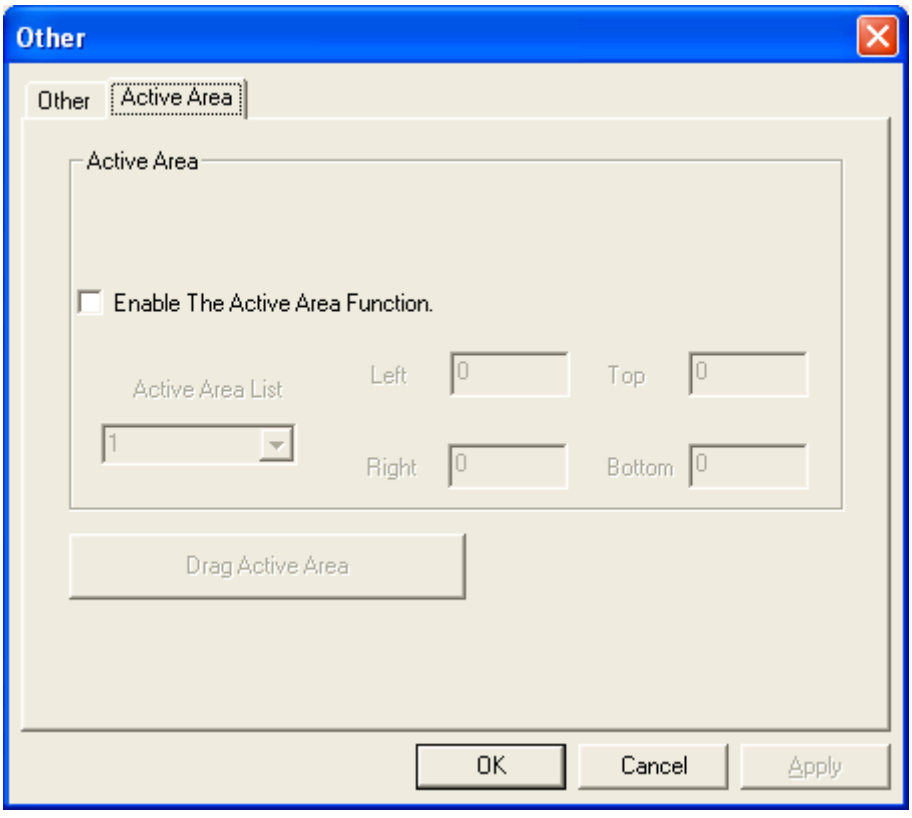

Active Area

Drag active area to enable Active Area Function.

Hardware

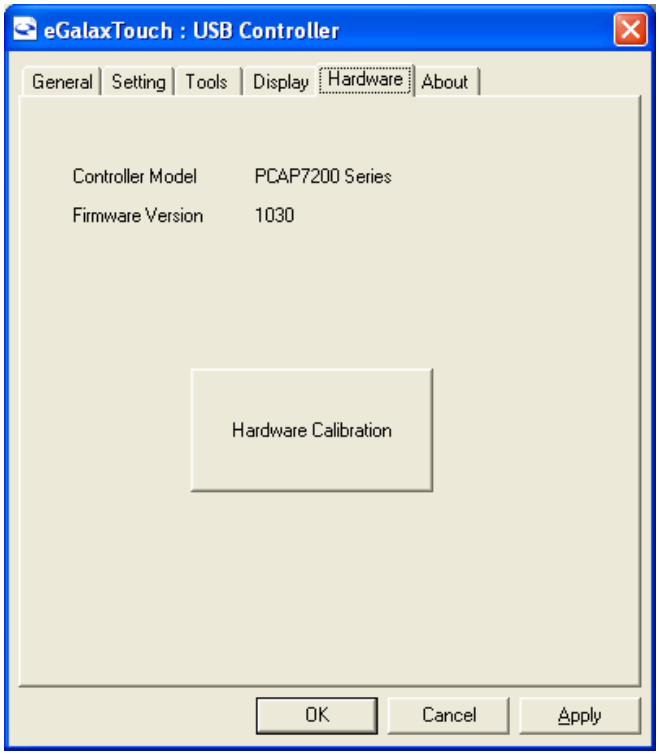

Saturn Hardware Configuration

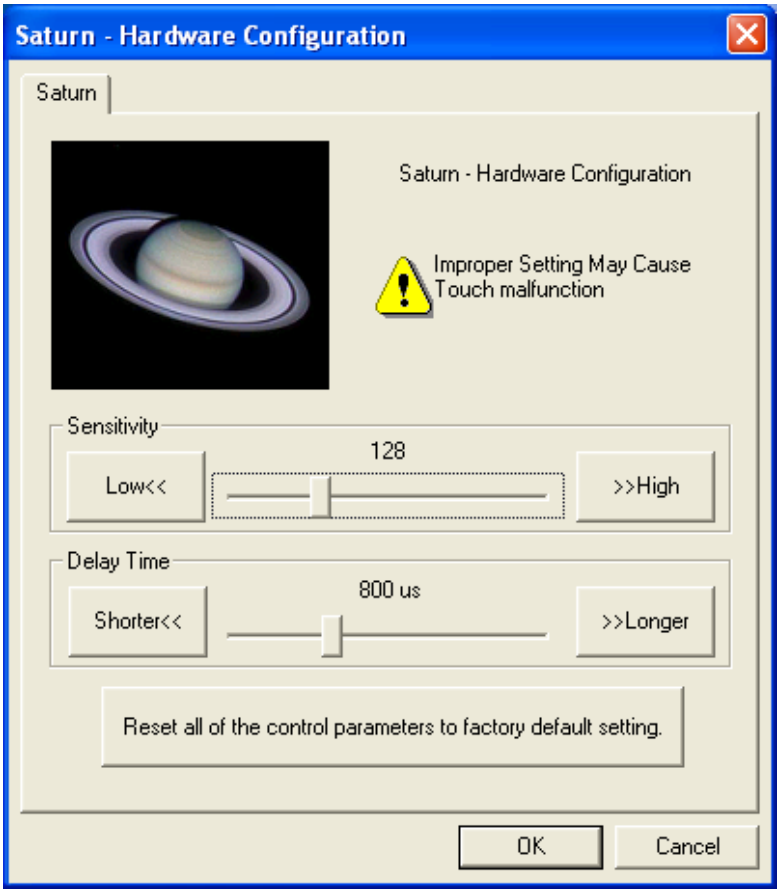

About

To display information about eGalaxTouch and its version.

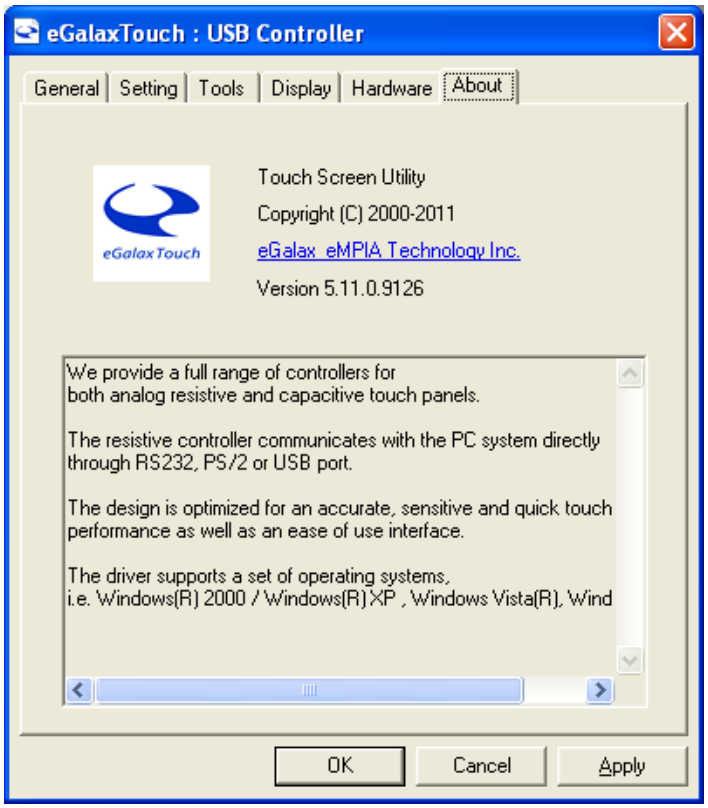

Appendix A: Panel Mounting and VESA Mounting

The ARCDIS-1XXAPRG(H) is designed to be panel-mounted and VESA mounted as shown in Picture. Just carefully place the unit through the hole and tighten the given screws from the rear to secure the mounting.

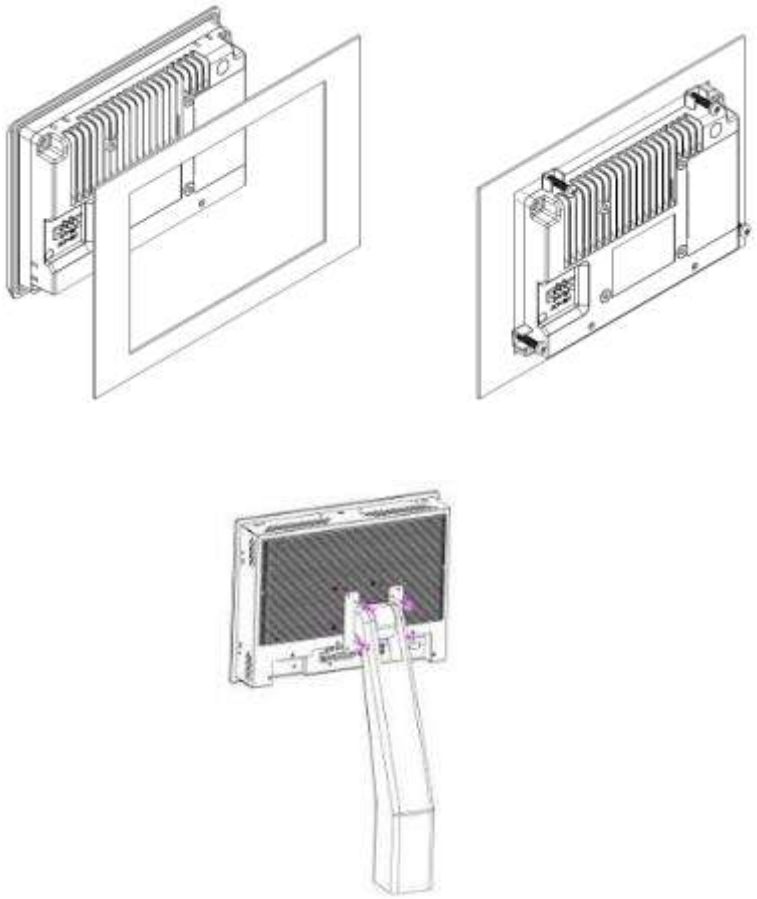

Figure A: Panel mounting and VESA mounting

***Notice**：

Tighten the mounting clip screws by hand until the gasket seal contacts the mounting surface uniformly.

Tighten the mounting clips screws to a torque of 8 ~ 10 kgf-cm by using the specified sequence, making sure not to overtighten.

*Tighten the mounting clips to the specified torque to provide a proper seal and to prevent damage to the product. Aplex assumes no responsibility for water or chemical damage to the product or other equipment within the enclosure due to improper installation.